CDP-C100

SERVICE MANUAL

US Model
Canadian Model
AEP Model
E Model

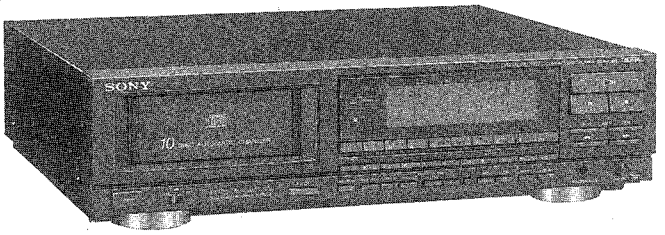

SPECIFICATIONS

System: Compact disc digital audio system
Disc: Compact disc
Laser: Semiconductor laser (λ = 780 nm)
Emission duration: Continuous
Laser output: Less than 44.6 μW
* This output is the value measured through the aperture of 7 mm diameter at a distance of 200 mm from the objective lens surface on the Optical Pick-up Block.

Frequency response
2—20,000 Hz ±0.5 dB
Signal to noise ratio
More than 102 dB
Dynamic range: More than 95 dB
Harmonic distortion
Less than 0.003% (1 kHz)
Channel separation
More than 95 dB (1 kHz)
Wow and flutter: Below measurable limit

Outputs jacks

LINE OUT (FIXED) (phono jacks)	Output level 2 V (at 50 kilohms) Load impedance over 10 kilohms
LINE OUT (VARIABLE) (phono jacks)	Output level max. 2 V (at 50 kilohms) Load impedance over 50 kilohms
HEADPHONES (stereo phone jack)	Output level max. 15 mW Load impedance 32 ohms

Except US model:

DIGITAL OUT (phono jack)	Output level 0.5 V p-p (at 75 ohms) Load impedance 75 ohms

Power requirements
US model: 120 V AC, 60 Hz
AEP model: 220 V AC, 50/60 Hz
E model: 110—120 or 220—240 V AC, adjustable, 50/60 Hz
Power consumption
US, AEP model: 13 W
E model: 14 W
Dimensions: Approx. 430 × 115 × 365 mm (w/h/d) (17 × 4 5/8 × 14 3/8 inches) including projecting parts and controls
Weight: Approx. 6.6 kg (14 lb 9 oz), net

Supplied accessories
Remote commander (1)
Disc magazine (1)
CD booklet holder (1)
Audio signal connecting cord (phono plug × 2 ⟷ phono plug × 2) (1)
Sony SUM-3 (NS) batteries (2)

Remote commander
Remote control system
Infrared control
Power requirements
3 V DC with two size AA (R6) batteries
Dimensions: Approx. 62 × 20 × 168.5 mm (w/h/d) (2 1/2 × 13/16 × 6 3/4 inches)
Weight: Approx. 130 g (5 oz) incl. batteries

Design and specifications subject to change without notice.

MICROFILM

COMPACT DISC PLAYER

SONY®

FEATURES

The compact disc player is equipped with an automatic disc changer which allows you to play up to 10 discs in a row. You can choose from a large number and wide variety of selections.

Custom file functions include:
- **The disc memo function** allows you to name your discs and to store those names in memory.
- **The program bank function** allows you to store your program and its name in memory.

A variety of playing modes:
- **Program play** allows you to play up to 19 selections or the whole disc, in any desired order.
- **Shuffle play** for playing selections in random order
- **Repeat play** for repeating individual discs, all the discs in a magazine, program and shuffle play.

The easy-to-use disc magazine
Allows you to play a particular set of discs at any time simply by inserting the disc magazine into the CD player. Additional magazines (optional) allows you to create a wide variety of sets.

TABLE OF CONTENTS

Section	Title	Page
Specifications		1
Features		2
Servicing notes		3
SECTION 1.	GENERAL	5
1-1.	Location and Function of Controls	5
SECTION 2.	OUTLINE	6
2-1.	Switch and Sensor operations	6
SECTION 3.	ELECTRICAL ADJUSTMENTS	7
3-1.	RF PLL Frequency Adjustment /Lock Frequency Check	7
3-2.	Focus Bias Adjustment	7
3-3.	E-F Balance Adjustment	8
3-4.	Focus/Tracking Gain Adjustment (Reference)	8
SECTION 4.	DIAGRAMS	10
4-1.	Circuit Boards Location	10
4-2.	Semiconductor Lead Layouts	11
4-3.	Schematic on waveforms	12
4-4.	Printed Wiring Boards	13
4-5.	Schematic Diagram	17
4-6.	Fluorescent Indicator Tube (FLD801)	20
4-7.	IC Block Diagram	20
SECTION 5.	EXPLODED VIEWS	23
SECTION 6.	ELECTRICAL PARTS LIST	28

SAFETY CHECK-OUT

After correcting the original service problem, perform the following safety check before releasing the set to the customer:
Check the antenna terminals, metal trim, "metallized" knobs, screws, and all other exposed metal parts for AC leakage. Check leakage as described below.

LEAKAGE TEST

The AC leakage from any exposed metal part to earth ground and from all exposed metal parts to any exposed metal part having a return to chassis, must not exceed 0.5 mA (500 microampers). Leakage current can be measured by any one of three methods.

1. A commercial leakage tester, such as the Simpson 229 or RCA WT-540A. Follow the manufacturers' instructions to use these instruments.
2. A battery-operated AC milliammeter. The Data Precision 245 digital multimeter is suitable for this job.
3. Measuring the voltage drop across a resistor by means of a VOM or battery-operated AC voltmeter. The "limit" indication is 0.75 V, so analog meters must have an accurate low-voltage scale. The Simpson 250 and Sanwa SH-63Trd are examples of a passive VOM that is suitable. Nearly all battery operated digital multimeters that have a 2 V AC range are suitable. (See Fig. A)

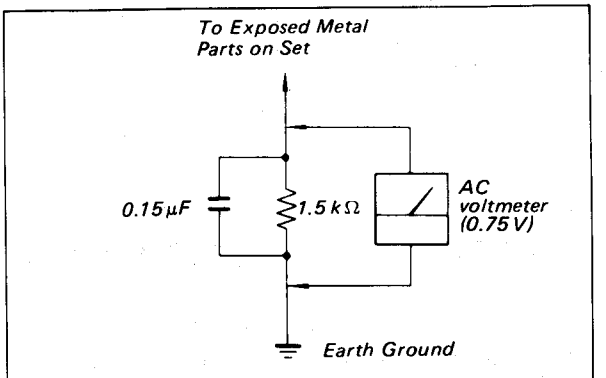

Fig. A. Using an AC voltmeter to check AC leakage.

SAFETY-RELATED COMPONENT WARNING!!

COMPONENTS IDENTIFIED BY MARK ⚠ OR DOTTED LINE WITH MARK ⚠ ON THE SCHEMATIC DIAGRAMS AND IN THE PARTS LIST ARE CRITICAL TO SAFE OPERATION. REPLACE THESE COMPONENTS WITH SONY PARTS WHOSE PART NUMBERS APPEAR AS SHOWN IN THIS MANUAL OR IN SUPPLEMENTS PUBLISHED BY SONY.

ATTENTION AU COMPOSANT AYANT RAPPORT À LA SÉCURITÉ!

LES COMPOSANTS IDENTIFIÉS PAR UNE MARQUE ⚠ SUR LES DIAGRAMMES SCHÉMATIQUES ET LA LISTE DES PIÈCES SONT CRITIQUES POUR LA SÉCURITÉ DE FONCTIONNEMENT. NE REMPLACER CES COMPOSANTS QUE PAR DES PIÈCES SONY DONT LES NUMÉROS SONT DONNÉS DANS CE MANUEL OU DANS LES SUPPLÉMENTS PUBLIÉS PAR SONY.

• SERVICING NOTES

NOTES ON HANDLING THE OPTICAL PICK-UP BLOCK OR BASE UNIT

The laser diode in the optical pick-up block may suffer electrostatic breakdown because of the potential difference generated by the charged electrostatic load, etc. on clothing and the human body.
During repair, pay attention to electrostatic breakdown and also use the procedure in the printed matter which is included in the repair parts.
The flexible board is easily damaged and should be handled with care.

PROTECTION OF EYES FROM LASER BEAM DURING SERVICING

This set employs a laser. Therefore, be sure to follow carefully the instructions below when servicing.

CAUTION

Use of controls or adjustments or performance of procedures other than those specified herein may result in hazardous radiation exposure.

1. Laser Diode Properties
   - Material: GaAlAs
   - Wavelength: 780 nm
   - Emission Duration: continuous
   - Laser Output: max. 44.6 μW*
     * This output is the value measured at a distance of about 200 mm from the objective lens surface on the Optical Pick-up Block.
2. During service, do not take the Optical Pick-up Block apart, and do not adjust the APC circuit. If there is a breakdown in the APC circuit (including laser diode), replace the entire Optiocal Pick-up Block (including APC borad).

BESKYTTELSE AF ØJNE MOD LASERSTRÅLING UNDER SERVICE

I dette apparat anvendes laserlys. Derfor skal nedenstående instruktioner nøje følges under service.

Følg iøvrigt instruktionerne i servicemanualen.

ADVARSEL!!

Under service må øjnene ikke komme nær objektiv-linsen på den optiske pick-up enhed. I tilfælde af at det er nødvendigt at kontrollere udsendelsen af laserlys, skal det ske i en afstand af mere end 25 cm fra den optiske pick-up.

1. Laser-didoe data
   - Materiale: GaAlAs
   - Bølgelængde: 780 nm
   - Udstråling: Kontinuerlig
   - Laseroutput: Max. 44.6 μW
     * Målt i 200 mm afstand fra overfladen af objektiv-linsen på den optiske pick-up enhed.
   - Klassifikation: Klasse IIIb.
2. Adskil aldrig den optiske pick-up enhed under service, og juster ikke APC kredsløbet (Automatic Power Control). Hvis APC kredsløbet (incl. laser-dioden) bryder ned, skal hele den optiske pick-up enhed (incl. APC printkortet) udskiftes.

LASER ADVARSEL MÆRKNING

Følgende mærkning findes indvendig i apparatet:

1. Advarsel Mærkning

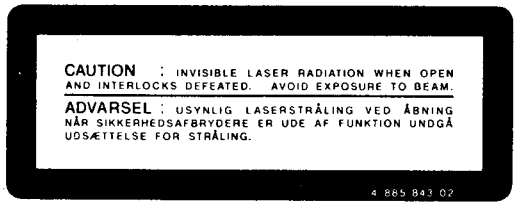

VAROITUS: Laite sisältää, laserdiodin, joka lähettää (näkymätöntä) silmille vaarallista lasersateilyä.

SECTION 1
GENERAL

1-1. LOCATION AND FUNCTION OF CONTROLS

FRONT PANEL

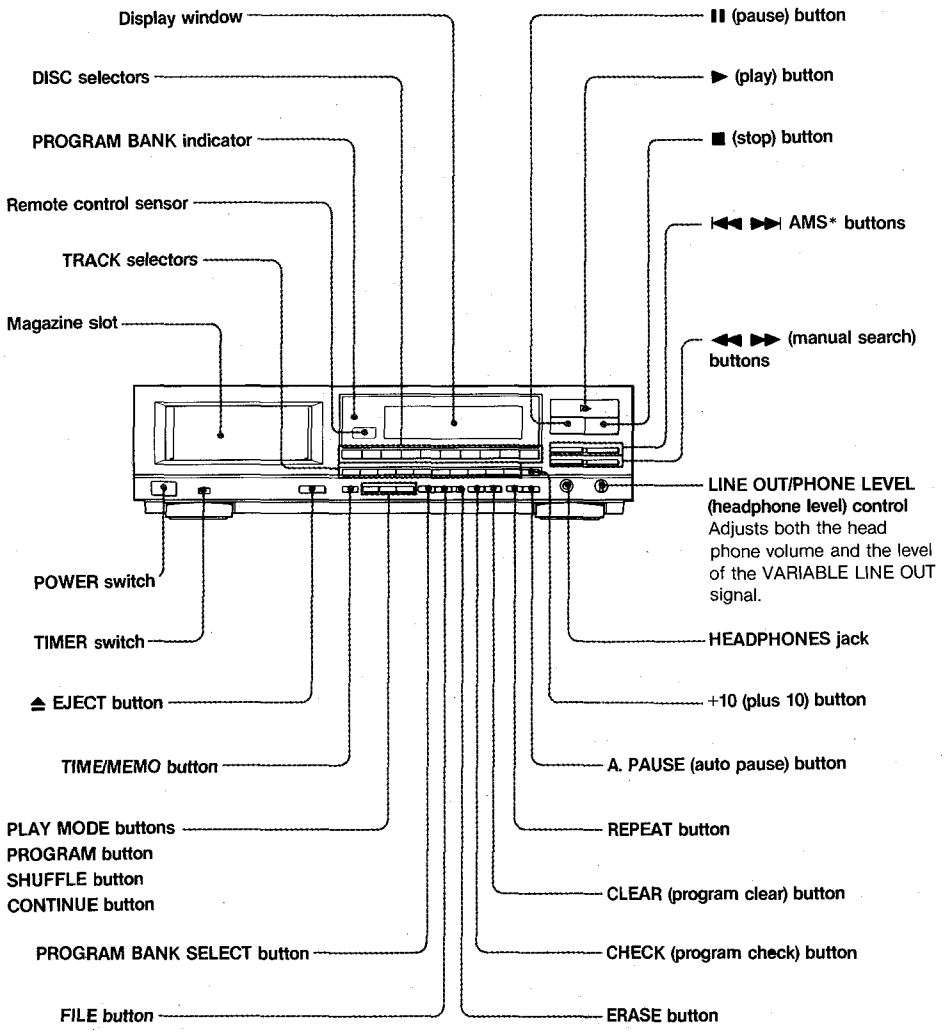

*AMS is an abbreviation of Automatic Music Sensor.

REMOTE COMMANDER

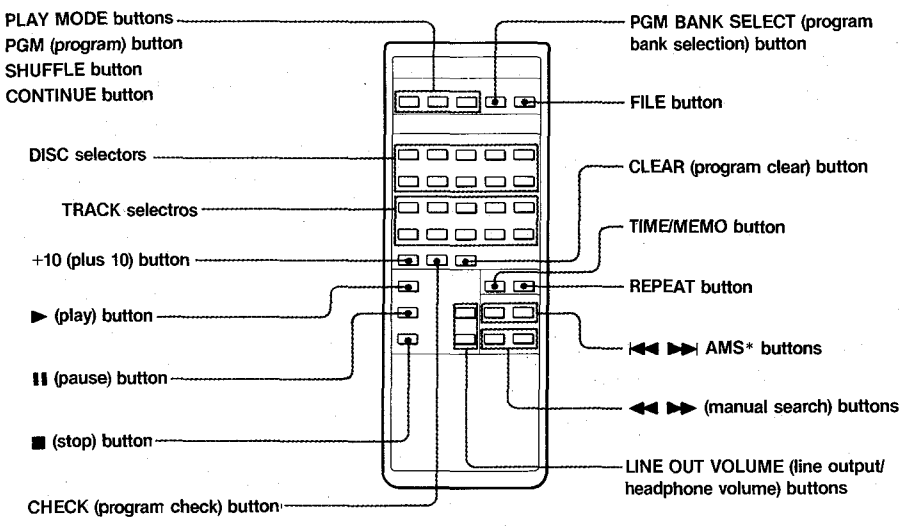

SECTION 2
OUTLINE

2-1. SWITCH AND SENSOR OPERATIONS

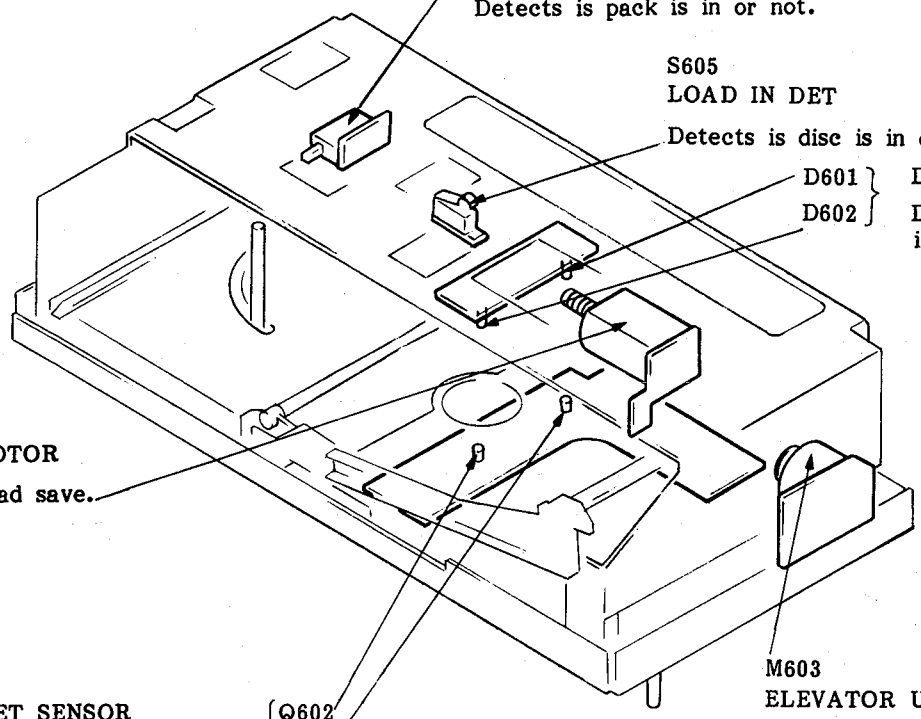

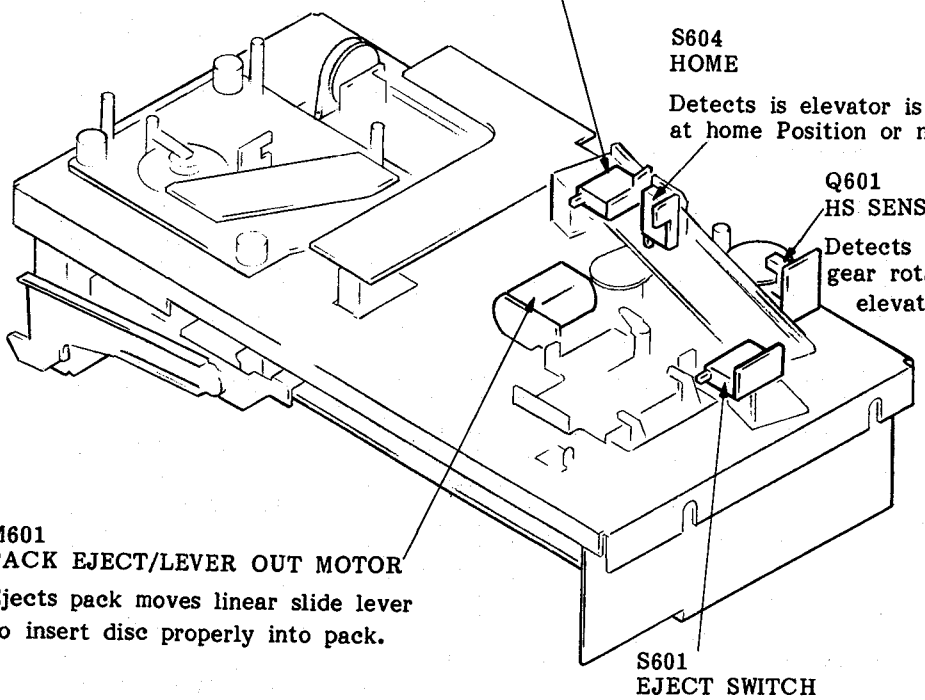

SECTION 3
ELECTRICAL ADJUSTMENTS

• **Parts location diagram relevant to the adjustment.**

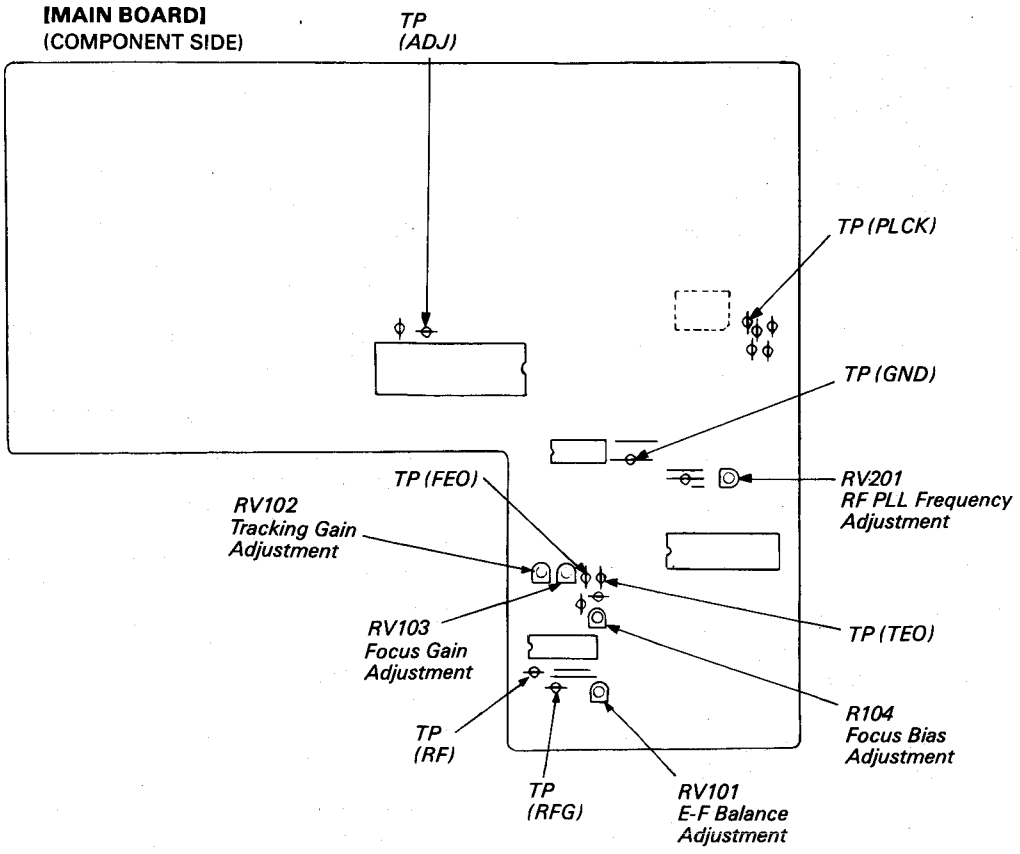

• **Note on Adjustment**

1. Perform adjustments in the order given.
2. Use YEDS-18 (Part No.: 3-702-101-01) dis unless otherwise indicated.
3. Use the oscilloscope with more than 10MΩ impedance.

3-1. RF PLL Frequency Adjustment/ Lock Frequency Check

Procedure:

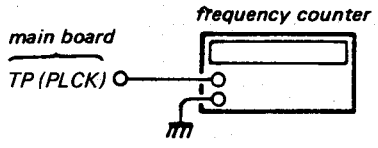

1. Connect test point TP (ASY) to ground with lead wire.
2. Turn POWER switch on.
3. Connect the frequency counter to test point TP (PLCK).
4. Adjust RV201 so that the reading on the frequency counter is 4.3218MHz ± 30kHz ... (RF PLL Frequency Adjustment).
5. Remove lead wire connecting TP (ASY) to ground.
6. Put disc (YEDS-18) in and press D button.
7. Confirm that the reading on the frequency counter is 4.3218MHz.

3-2. Focus Bias Adjjustment

Note: This adjustment should be mode when replacing Optical Pick-up Block.

Procedure:

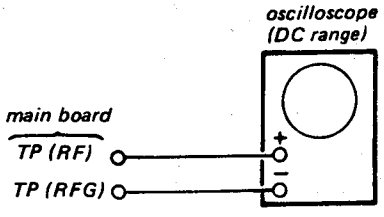

1. Connect oscilloscope to test point TP (RF) and test point TP (RFG).
2. Turn POWER switch on.
3. Put disc (YEDS-18) in and press ▷ button.
4. Adjust RV104 for an optimum waveform eye pattern or so that the peak is maximum. Optimum eye pattern means that shape " ◇ " can be clearly distinguished at the center of the waveform.

RF signal waveform

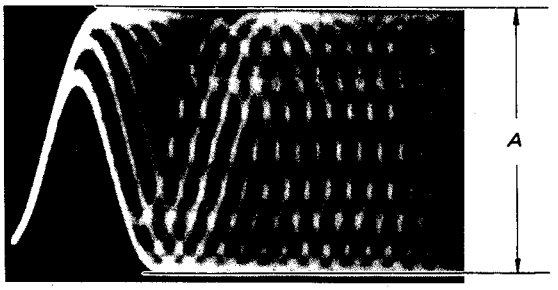

A = 1.2V ± 0.2 (Vp-p)

3-3. E-F Balance Adjustment

Note: This adjustment should be made when replacing Optical Pick-up Block.

Procedure:

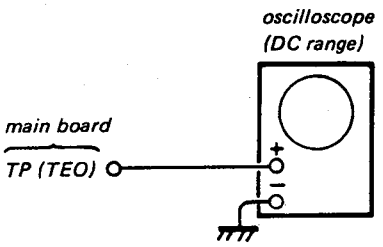

1. Connect test point TP (ADJ) to ground with lead wire.
2. Connect oscilloscope to test point TP (TE0).
3. Turn POWER switch on.
4. Put disc (YEDS-18) in and press ▷ button.
5. Adjust RV101 so that the traverse waveform is symmetrical above and below.
6. After adjustment remove the lead wire connected in step 5.

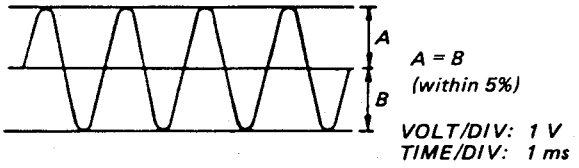

3-4. REFERENCE
Focus/Tracking Gain Adjustment

A frequency response analyzer is necessary in order to perform this adjustment exactly.

However, this gain has a margin, so even if it is slightly off, there is no problem. Therefore, do not perform this adjustment.

Focus/tracking gain determines the pick-up follow-up (vertical and horizontal) relative to mechanical noise and mechanical shock when the 2-axis device operate.

However, as these reciprocate, the adjustment is at the point where both are satisfied.

- When gain is raised, the noise when the 2-axis device operates increases.
- When gain is lowered, it is more susceptible to mechanical shock and skipping occurs more easily.
- When gain adjustment is off, the symptoms below appear.

Symptoms \ Gain	Focus	Tracking
• The time until music starts becomes longer for STOP →▷PLAY or automatic selection (⏮, ⏭ buttons pressed. (Normally takes about 2 seconds.)	low	low or high
• Music does not start and disc continues to rotate for STOP→▷PLAY or automatic selection (⏮, ⏭ buttons pressed.)	–	low
• Disc table opens shortly after STOP→▷PLAY.	low or high	–
• Sound is interrupted during PLAY. Or time counter display stops progressing.	–	low
•More noise during 2-axis device operation.	high	high

The following is a simple adjustment method.

– Simple Adjustment –

Note: Since exact adjustment cannot be performed, remember the positions of the controls before performing the adjustment. If the positions after the simple adjustment are only a little different, return the controls to the original position.

Procedure:

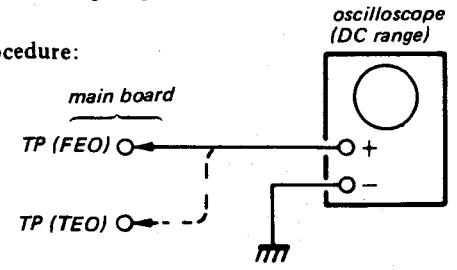

1. Keep the set horizontal.
   (If the set is not horizontal, this adjustment cannot be performed due to the gravity against the 2 axis device.)
2. Insert disc (YEDS-18: Fifth Selection) and press ▷PLAY button.
3. Connect oscilloscope to main amp board TP (FEO).
4. Adjust RV103 so that the waveform is as shown in the figure below. (focus gain adjustment)

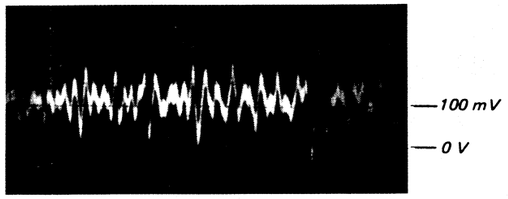

VOLT/DIV: 100mV
TIME/DIV: 2mS

- Incorrect Examples (DC level changes more than on adjusted waveform)

low focus gain

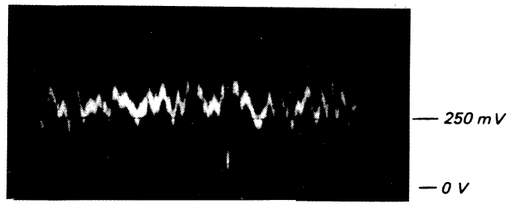

VOLT/DIV: 100mV
TIME/DIV: 2mS

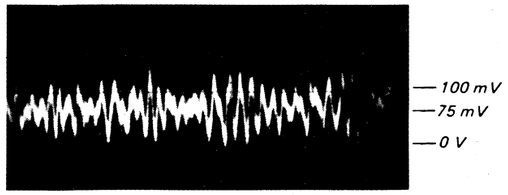

VOLT/DIV: 100mV
TIME/DIV: 2mS

5. Connect oscilloscope to main board TP (TE0).
6. Adjust RV102 so that the waveform is as shown in the figure below. (Tracking Gain Adjustment)

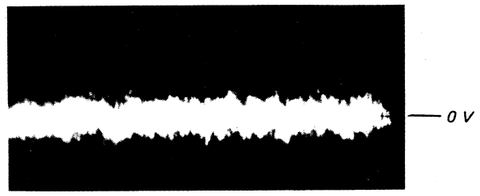

VOLT/DIV: 1V
TIME/DIV: 2mS

- Incorrect Examples (fundamental wave appears)

low tracking gain

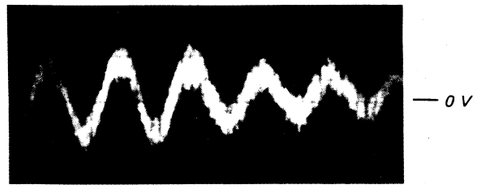

VOLT/DIV: 1V
TIME/DIV: 2mS

high tracking gain
(higher fundamental wave than for low gain)

VOLT/DIV: 1V
TIME/DIV: 2mS

SECTION 4
DIAGRAMS

4-1. CIRCUIT BOARDS LOCATION

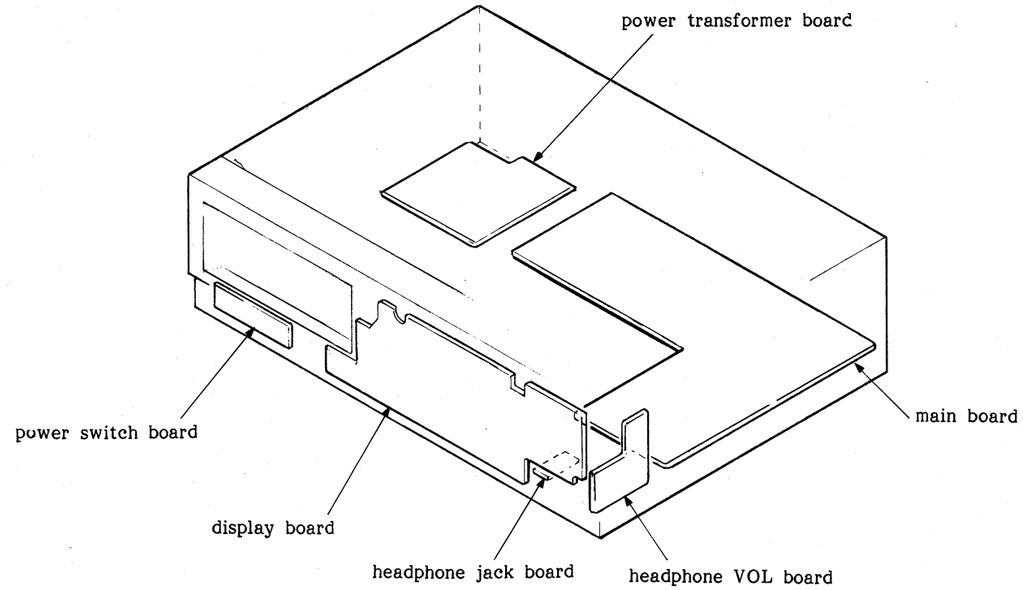

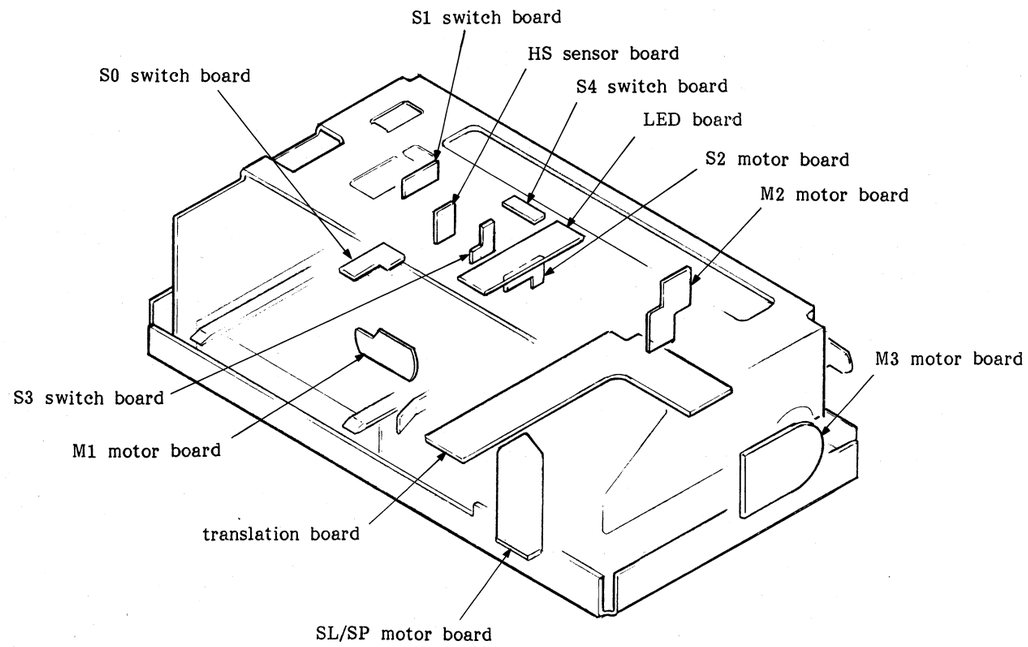

4-2. SEMICONDUCTOR LEAD LAYOUTS

CXA1081S

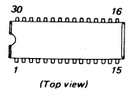

CXA1182S

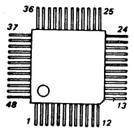

CXD1088Q

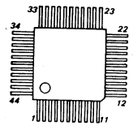

CXD1125Q
CXP5058H-094Q

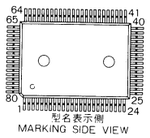

CXK5816M-10L

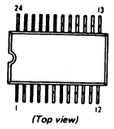

LA6500-FA

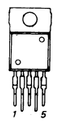

LA6520
LB1649

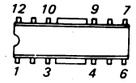

LC9600R-183
TDA1541-N5

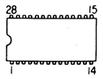

M50740A-425SP

TOP VIEW

M50747-443SP

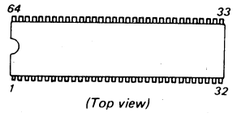

(Top view)

M5218P
M5219P
M74HC6004P

M5230L-A

M5290P-16

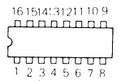

NJM4556S

TC40H004P

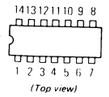

PT360FS

2SA1345
2SC3399
2SC3402
2SC3860

2SB734

2SB1014

2SB1274-RS
2SD1913SA

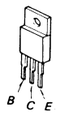

2SC2021

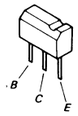

2SC3622A-K

AY3638S

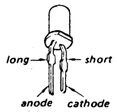

GPIS53

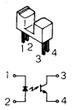

HZS4.3NB2
HZS6B1L
HZS9B2L

ISS132
10E2

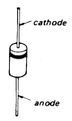

SE303AY

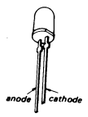

4-3. SCHEMATIC ON WAVEFORMS

❶
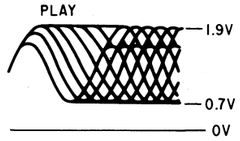

❷

APPROX 70mVP-P

❸

APPROX 3.6VP-P

❹
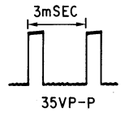

35VP-P

❺
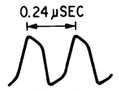

6VP-P

❻
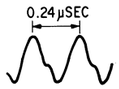

5.2VP-P

❼

4.9VP-P

❽
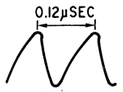

3.7VP-P

❾

1.55VP-P

❿
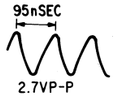

2.7VP-P

⓫
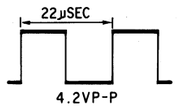

4.2VP-P

⓬
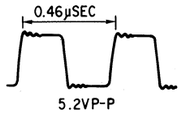

5.2VP-P

⓭
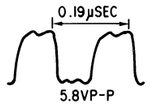

5.8VP-P

⓮
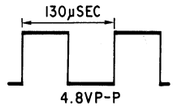

4.8VP-P

⓯
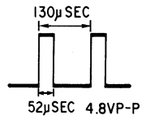

4.8VP-P

⓰
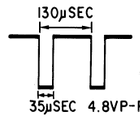

4.8VP-P

⓱
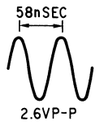

2.6VP-P

⓲
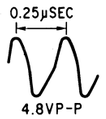

4.8VP-P

⓳
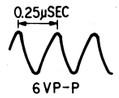

6VP-P

⓴
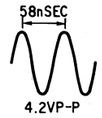

4.2VP-P

㉑

2.4VP-P

㉒
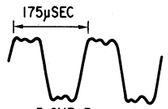

5.6VP-P

㉓
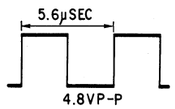

4.8VP-P

㉔
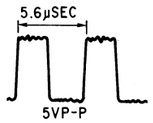

5VP-P

㉕
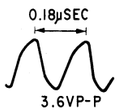

3.6VP-P

4-4. PRINTED WIRING BOARDS

.See page 9 for circuit boards location.
.See page 10 for semiconductor lead layouts.

.SEMICONDUCTOR LOCATION

Ref. No.	Location	Ref. No.	Location	Ref. No.	Location
D101	K-10	D920	A-18	Q403	D-12
D301	E-15	IC101	J-11	Q450	B-13
D302	F-16	IC201	J-8	Q451	B-12
D303	E-17	IC202	J-9	Q452	B-12
D304	E-15	IC203	H-9	Q550	B-13
D305	H-11	IC301	E-9	Q551	B-12
D306	G-12	IC302	D-10	Q552	B-12
D401	D-12	IC303	F-18	Q601	F-2
D601	K-4	IC304	E-19	Q602	A-5
D602	K-1	IC305	E-13	Q603	A-3
D801	J-17	IC306	E-16	Q801	I-20
D901	B-19	IC307	E-15	Q802	K-17
D902	C-19	IC308	G-11	Q901	D-17
D903	C-19	IC351	B-8	Q902	C-17
D904	C-19	IC401	C-8	Q903	D-20
D905	B-19	IC402	B-10	Q904	A-17
D906	B-19	IC403	B-11	Q905	A-17
D907	C-19	IC701	A-21	Q906	A-18
D908	C-19	IC801	J-20	Q907	A-18
D910	E-17	IC802	J-17	Q908	B-16
D911	B-18	IC901	C-17	Q909	A-17
D912	D-20	IC902	D-19		
D913	B-18	IC903	B-16		
D914	B-19				
D915	A-19	Q101	J-10		
D916	B-19	Q201	G-8		
D917	A-19	Q202	G-8		
D918	A-18	Q401	D-13		
D919	B-18	Q402	D-12		

Note:

- ○——○ : parts extracted from the component side.
- ■ : parts mounted on the conductor side.
- ○—●—○ : Jumper wire connected to the ground pattern on the component side.
- ▒ : Pattern on the side which is seen.

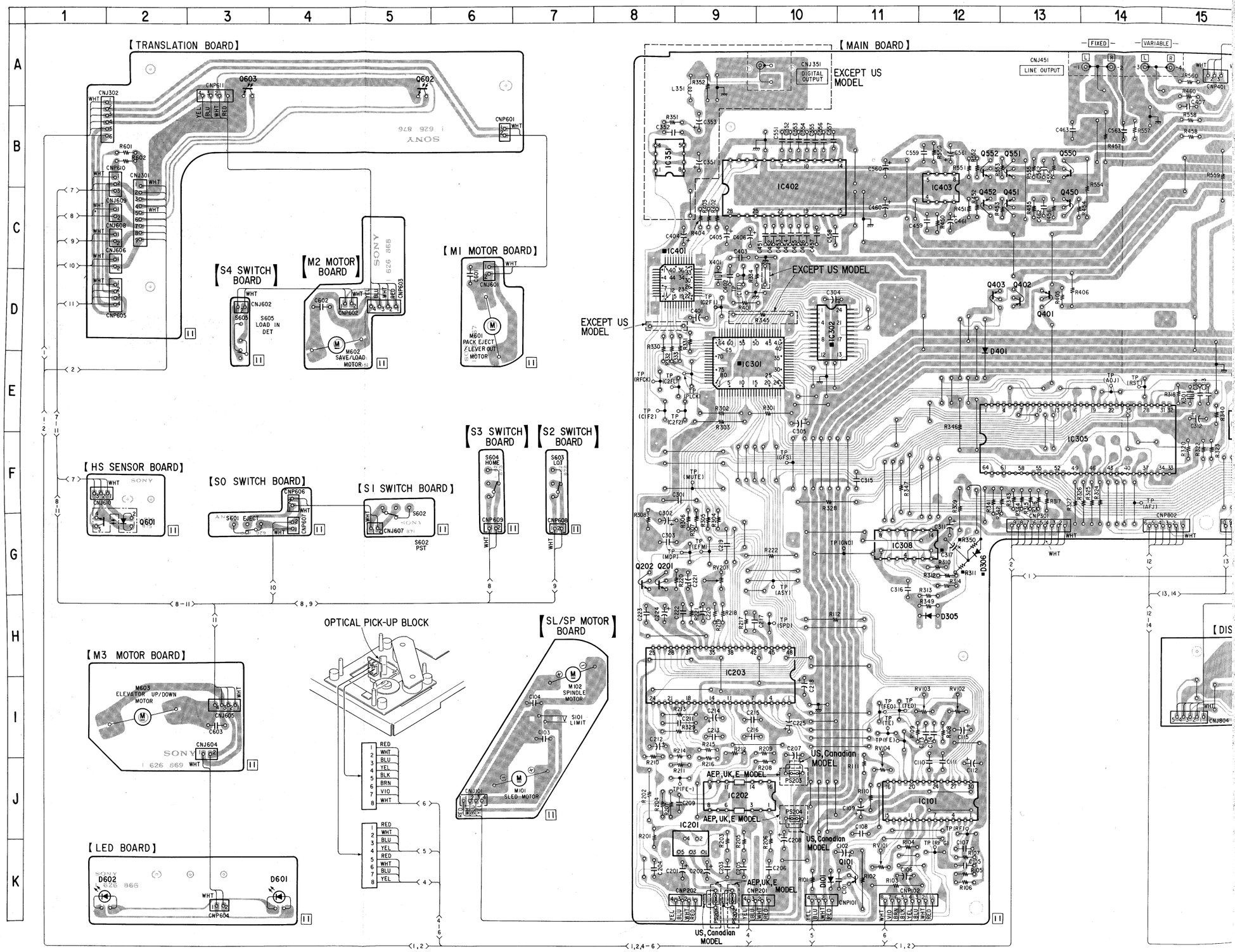

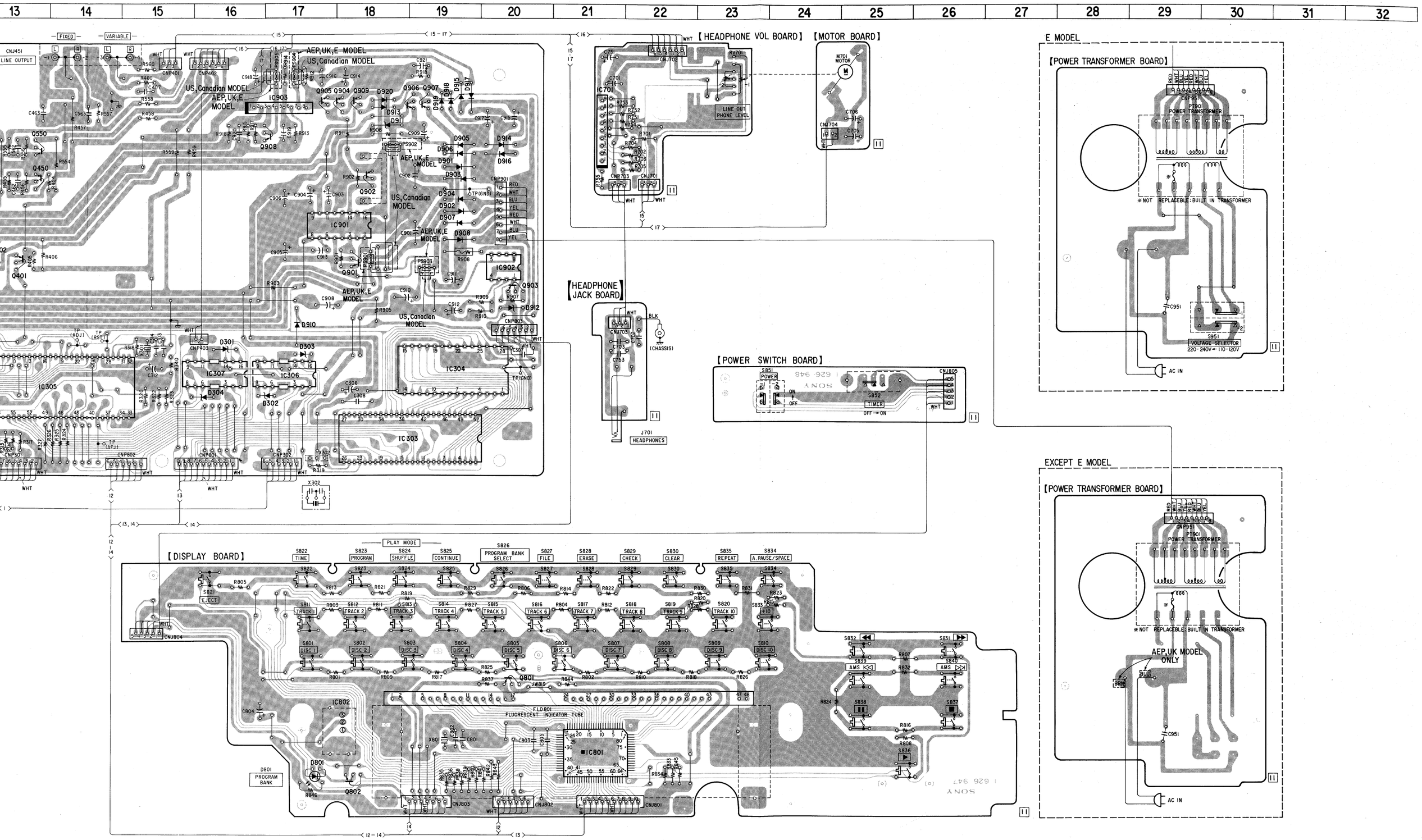
13 14 15 16 17 18 19 20 21 22 23 24 25 26 27 28 29 30 31 32
FIXED
VARIABLE
CNJ451
LINE OUTPUT
AEP,UK,E MODEL
US,Canadian MODEL
IC903
IC901
IC902
IC304
IC305
IC307
IC306
IC303
X302
【HEADPHONE VOL BOARD】
IC701
CNJ702
RV701
LINE OUT
PHONE LEVEL
【MOTOR BOARD】
M701
MOTOR
CNJ704
【HEADPHONE JACK BOARD】
CNJ703
J701
HEADPHONES
(CHASSIS)
【POWER SWITCH BOARD】
S851
POWER
S852
TIMER
OFF → ON
CNJ805
E MODEL
【POWER TRANSFORMER BOARD】
CNP951
PT901
POWER TRANSFORMER
※NOT REPLACEBLE: BUILT IN TRANSFORMER
C951
S951
VOLTAGE SELECTOR
220-240V ← 110-120V
AC IN
EXCEPT E MODEL
【POWER TRANSFORMER BOARD】
CNP951
PT901
POWER TRANSFORMER
※NOT REPLACEBLE: BUILT IN TRANSFORMER
AEP,UK MODEL
ONLY
C951
AC IN
【DISPLAY BOARD】
PLAY MODE
S822 TIME
S823 PROGRAM
S824 SHUFFLE
S825 CONTINUE
S826 PROGRAM BANK SELECT
S827 FILE
S828 ERASE
S829 CHECK
S830 CLEAR
S835 REPEAT
S834 A.PAUSE/SPACE
S821 EJECT
S811 TRACK 1
S812 TRACK 2
S813 TRACK 3
S814 TRACK 4
S815 TRACK 5
S816 TRACK 6
S817 TRACK 7
S818 TRACK 8
S819 TRACK 9
S820 TRACK 10
S833 +10
S801 DISC 1
S802 DISC 2
S803 DISC 3
S804 DISC 4
S805 DISC 5
S806 DISC 6
S807 DISC 7
S808 DISC 8
S809 DISC 9
S810 DISC 10
S832
S831
S839 AMS
S840 AMS
S838
S837
S836
Q801
FLD801
FLUORESCENT INDICATOR TUBE
IC802
IC801
D801
PROGRAM BANK
Q802
CNJ804
CNJ803
CNJ802
CNJ801

4-5. SCHEMATIC DIAGRAM

.See page 11 for waveforms.
.See page 20 for note and fluorescent indicator tube (FLD801).
.See page 20 for IC block diagram.

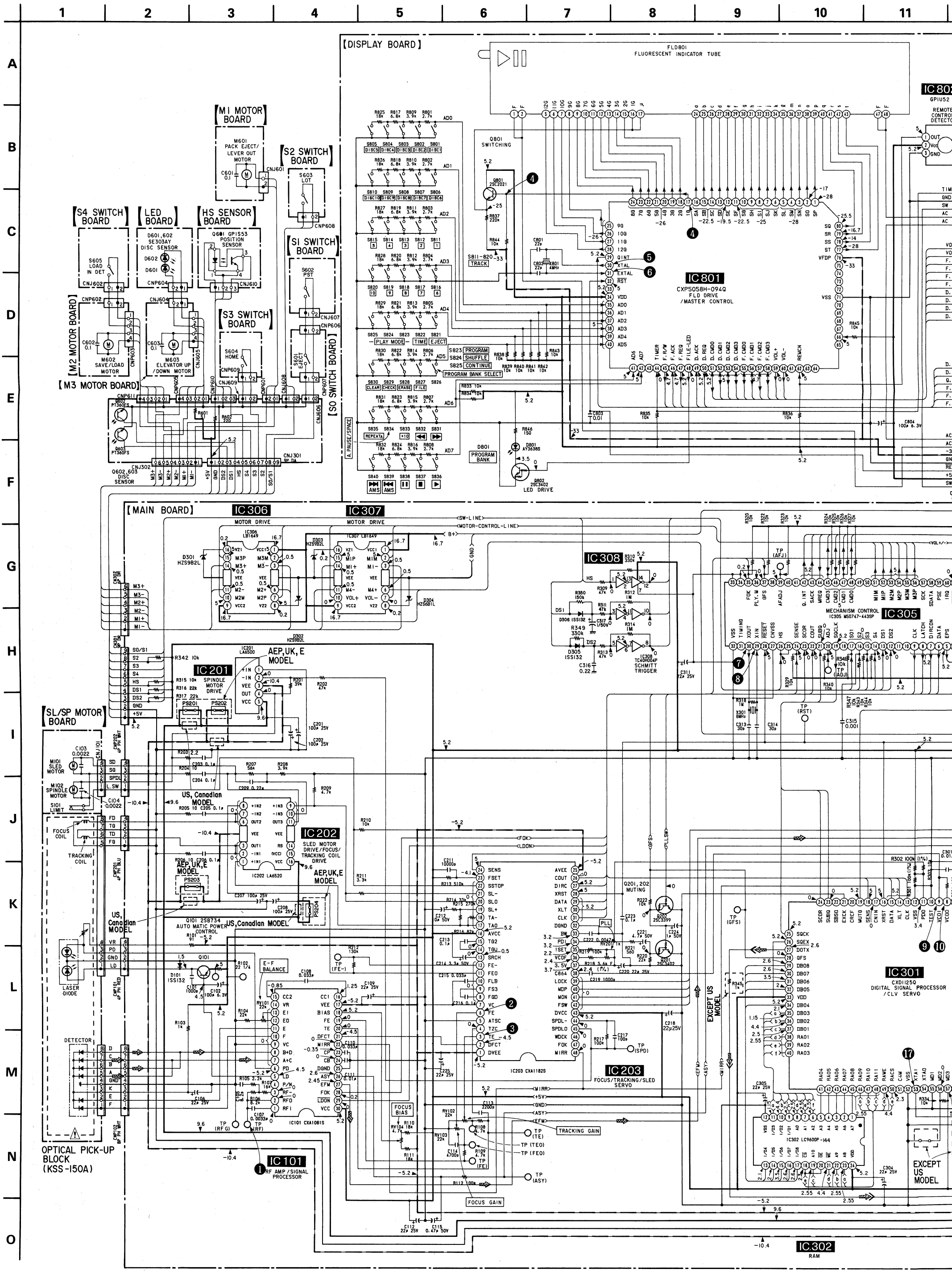

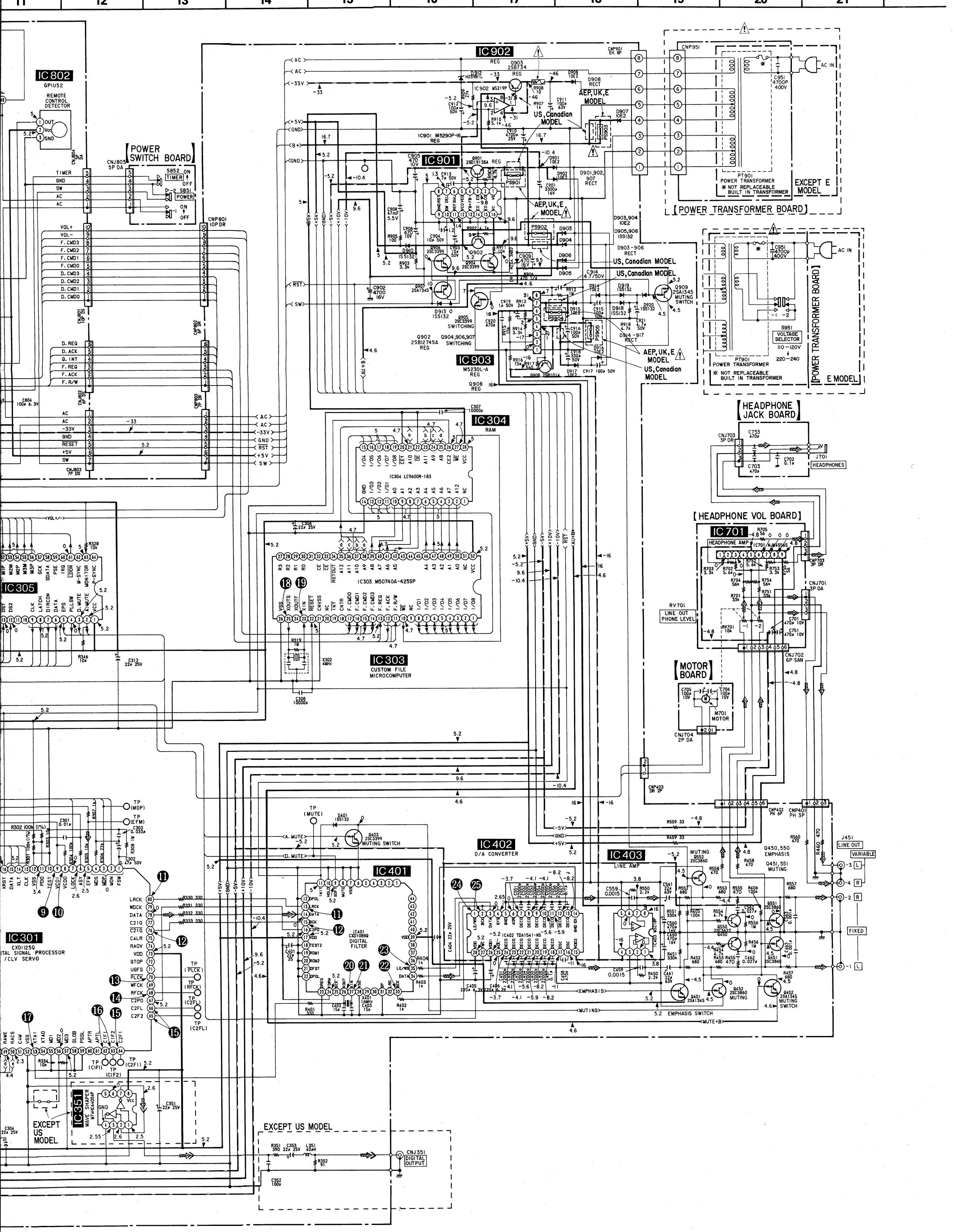
11
12
13
14
15
16
17
18
19
20
21
IC 802
GP1U52
REMOTE CONTROL DETECTOR
POWER SWITCH BOARD
IC 902
IC 901
IC 903
M5230L-A
REG
IC 304
RAM
IC 303
CUSTOM FILE MICROCOMPUTER
IC 305
IC 301
CXD1125Q
DIGITAL SIGNAL PROCESSOR /CLV SERVO
IC 351
WAVE SHAPER
IC 402
D/A CONVERTER
IC 401
DIGITAL FILTER
IC 403
LINE AMP
IC 701
HEADPHONE AMP
POWER TRANSFORMER BOARD
EXCEPT E MODEL
E MODEL
HEADPHONE JACK BOARD
HEADPHONE VOL BOARD
MOTOR BOARD
M701 MOTOR
AEP, UK, E MODEL
US, Canadian MODEL
EXCEPT US MODEL
EXCEPT US MODEL
CNJ351 DIGITAL OUTPUT
LINE OUT
VARIABLE
FIXED
EMPHASIS
MUTING
MUTE+B
EMPHASIS SWITCH
MUTING SWITCH
LINE OUT PHONE LEVEL
RV701
S951 VOLTAGE SELECTOR
110-120V
220-240
AC IN
PT901 POWER TRANSFORMER
NOT REPLACEABLE BUILT IN TRANSFORMER
J701 HEADPHONES
J451 LINE OUT

4-6. FLUORESCENT INDICATOR TUBE (FLD801)

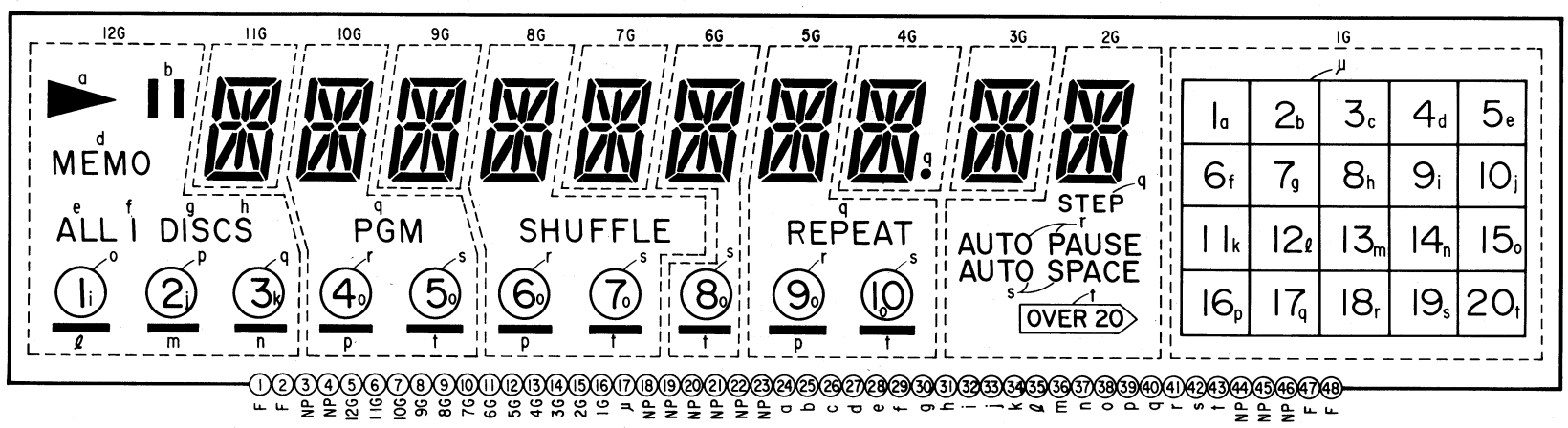

Note:

- All capacitors are in μF unless otherwise noted. pF: μμF 50WV or less are not indicated except for electrolytics and tantalums.
- All resistors are in Ω and 1/4 W or less unless otherwise specified.
- % : indicates tolerance.
- ⊸⊸ : fusible resistor.

Note:	Note:
The components identified by mark ⚠ or dotted line with mark ⚠ are critical for safety. Replace only with part number specified.	Les composants identifiés par une marque ⚠ sont critiques pour la sécurité. Ne les remplacer que par une pièce portant le numéro spécifié.

Ref. No.	Switch	Position
S101	LIMIT	OFF
S601	EJECT	OFF
S602	PST	OFF
S603	LOT	OFF
S604	HOME	OFF
S605	LOAD IN DET	OFF
S801	DISC 1	OFF
S802	DISC 2	OFF
S803	DISC 3	OFF
S804	DISC 4	OFF
S805	DISC 5	OFF
S806	DISC 6	OFF
S807	DISC 7	OFF
S808	DISC 8	OFF
S809	DISC 9	OFF
S810	DISC 10	OFF
S817	TRACK 1	OFF
S812	TRACK 2	OFF
S813	TRACK 3	OFF
S814	TRACK 4	OFF
S815	TRACK 5	OFF
S816	TRACK 6	OFF
S817	TRACK 7	OFF
S818	TRACK 8	OFF
S819	TRACK 9	OFF
S820	TRACK 10	OFF
S821	EJECT	OFF
S822	TIME	OFF
S823	PLAY MODE PROGRAM	OFF
S824	PLAY MODE SHUFFLE	OFF
S825	PLAY MODE CONTINUE	OFF
S826	PROGRAM BANK SELECT	OFF
S827	FILE	OFF
S828	ERASE	OFF
S829	CHECK	OFF
S830	CLEAR	OFF
S831	▶▶	OFF
S832	◀◀	OFF
S833	+10	OFF
S834	A. PAUSE/SPACE	OFF
S835	REPEAT	OFF
S836	▶	OFF
S837	■	OFF
S838	■■	OFF
S839	AMS	OFF
S840	AMS	OFF

- ▬▬ : B+ Line
- ▬ ▬ ▬ : B− Line
- ▭ : adjustment for repair.
- Voltage and waveforms are dc with respect to ground under no-signal (detuned) conditions.
  no mark : stop mode
- Voltages are taken with a VOM (50 kΩ/V).
  Voltage variations may be noted due to normal production tolerances.
- Waveforms are taken with a oscilloscope.
  Voltage variations may be noted due to normal production tolerances.
- Circled numbers refer to waveforms.
- Signal path.
  ⇨ : CD
  ⇨ : digital out

4-7. IC BLOCK DIAGRAM

IC101 CXA1081S

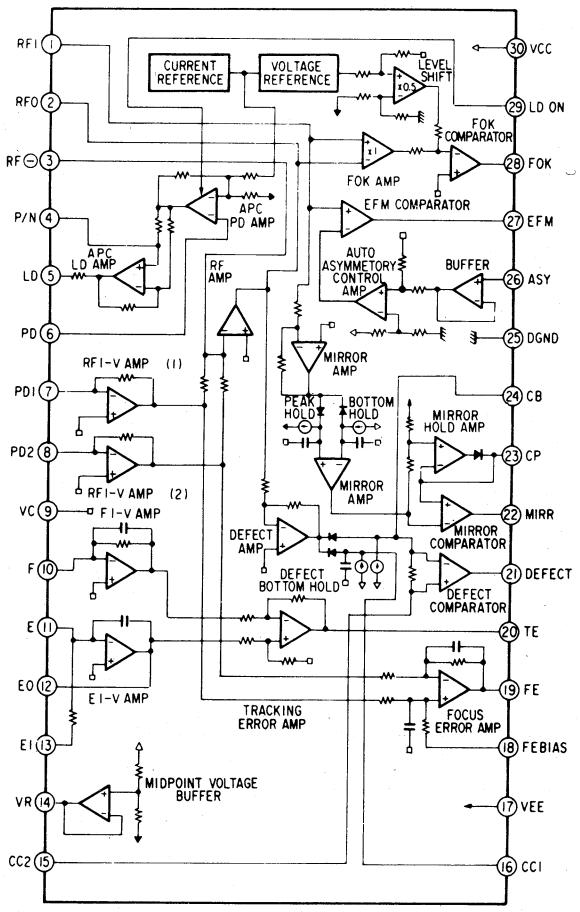

IC401 CXD1088Q

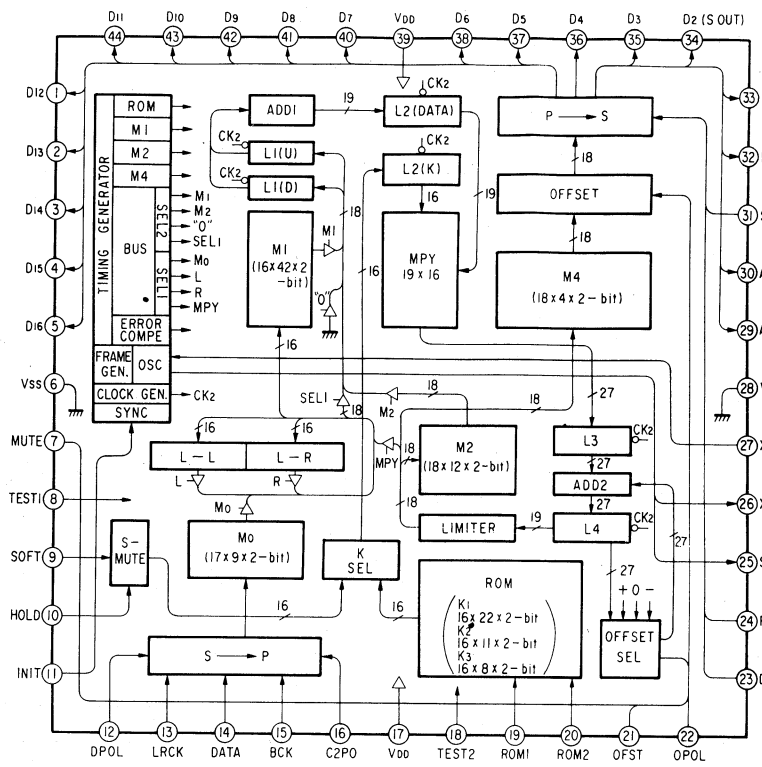

IC301 CXD1125Q

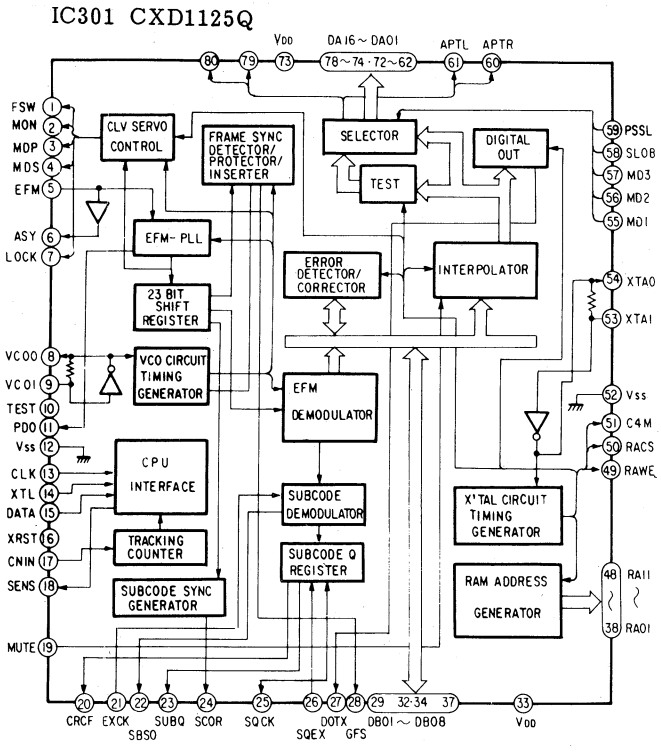

IC203 CXA1182S

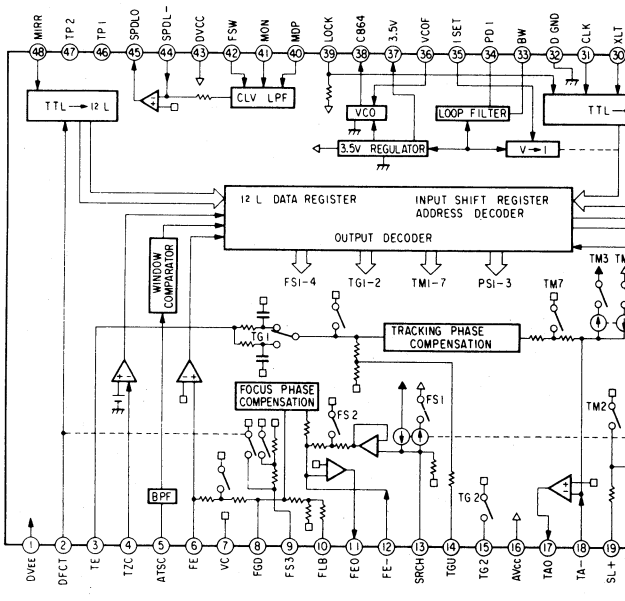

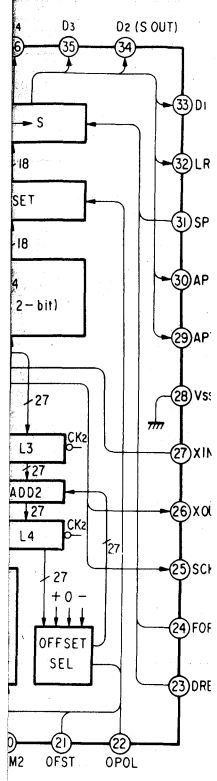

IC402 TDA1541-N5

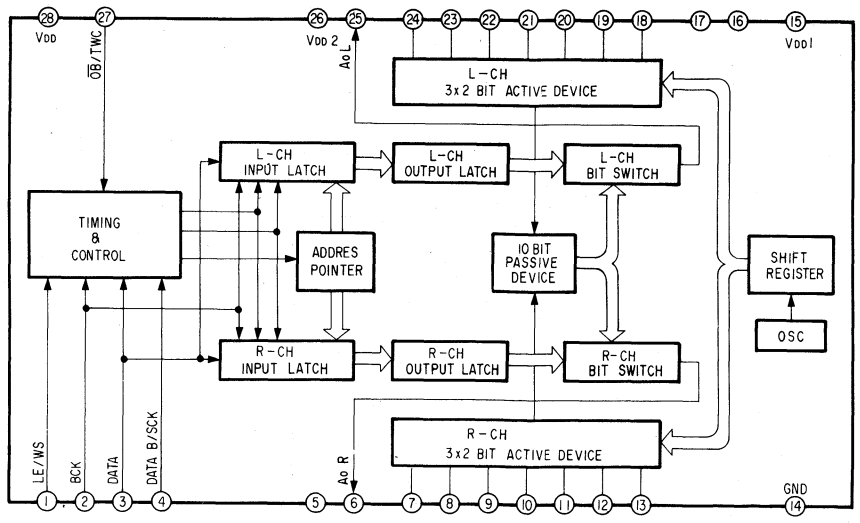

IC306,307 LB1649

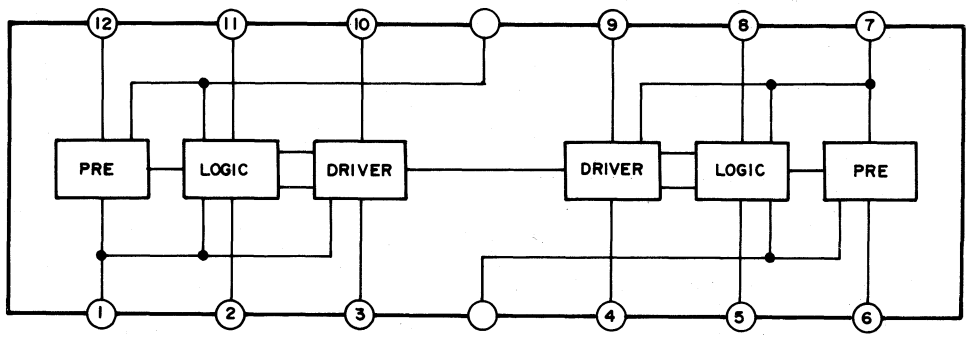

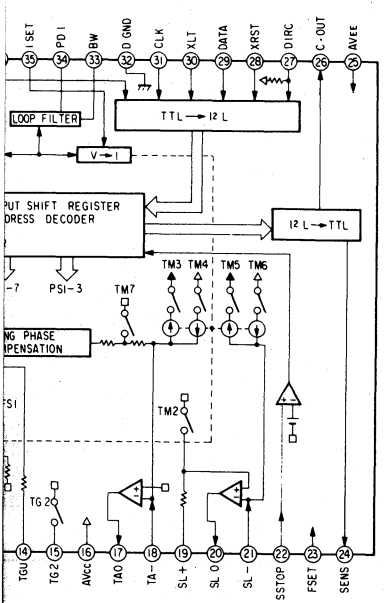

IC903 M5230L-A

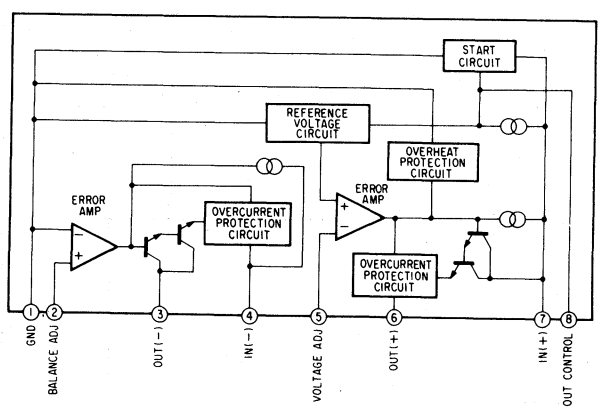

IC901 M5290P-16

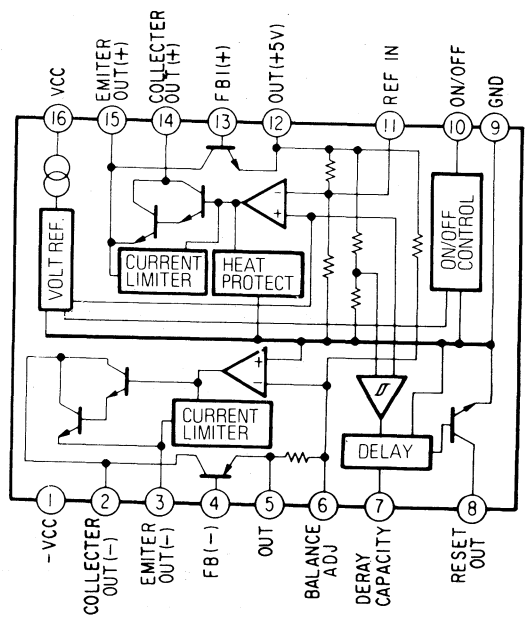

IC201 LA6500-FA

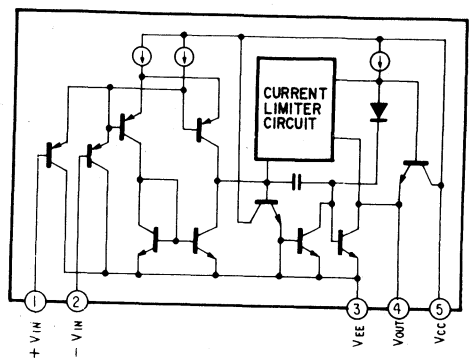

IC202 LA6520

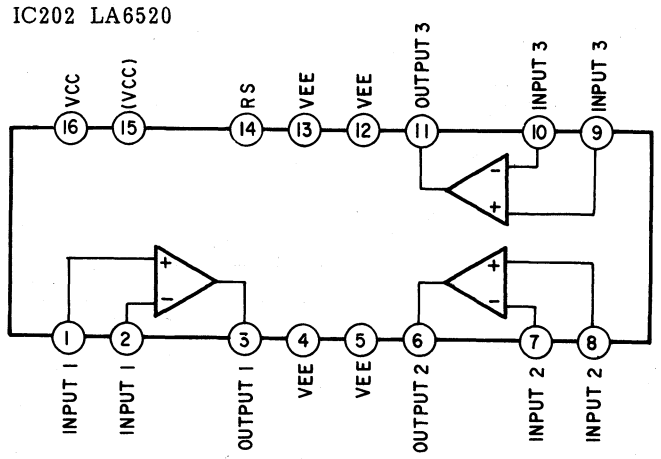

SECTION 5
EXPLODED VIEWS

NOTE:

- The mechanical parts with no reference number in the exploded views are not supplied.
- The construction parts of an assembled part are indicated with a collation number in the remark column.
- Items marked "★" are not stocked since they are seldom required for routine service. Some delay should be anticipated when ordering these items.
- Due to standardization, parts with part number suffix -XX and -X may be different from the parts specified in the components used on the set.
- Color Indication of Appearance Parts Example:
  (RED) . . . KNOB, BALANCE (WHITE)
  ↑ Cabinet's Color ↑ Parts' Color

The components identified by mark ⚠ or dotted line with mark ⚠ are critical for safety.
Replace only with part number specified.

Les composants identifiés par une marque ⚠ sont critiques pour la sécurité.
Ne les remplacer que par une pièce portant le numéro spécifé.

5-1.

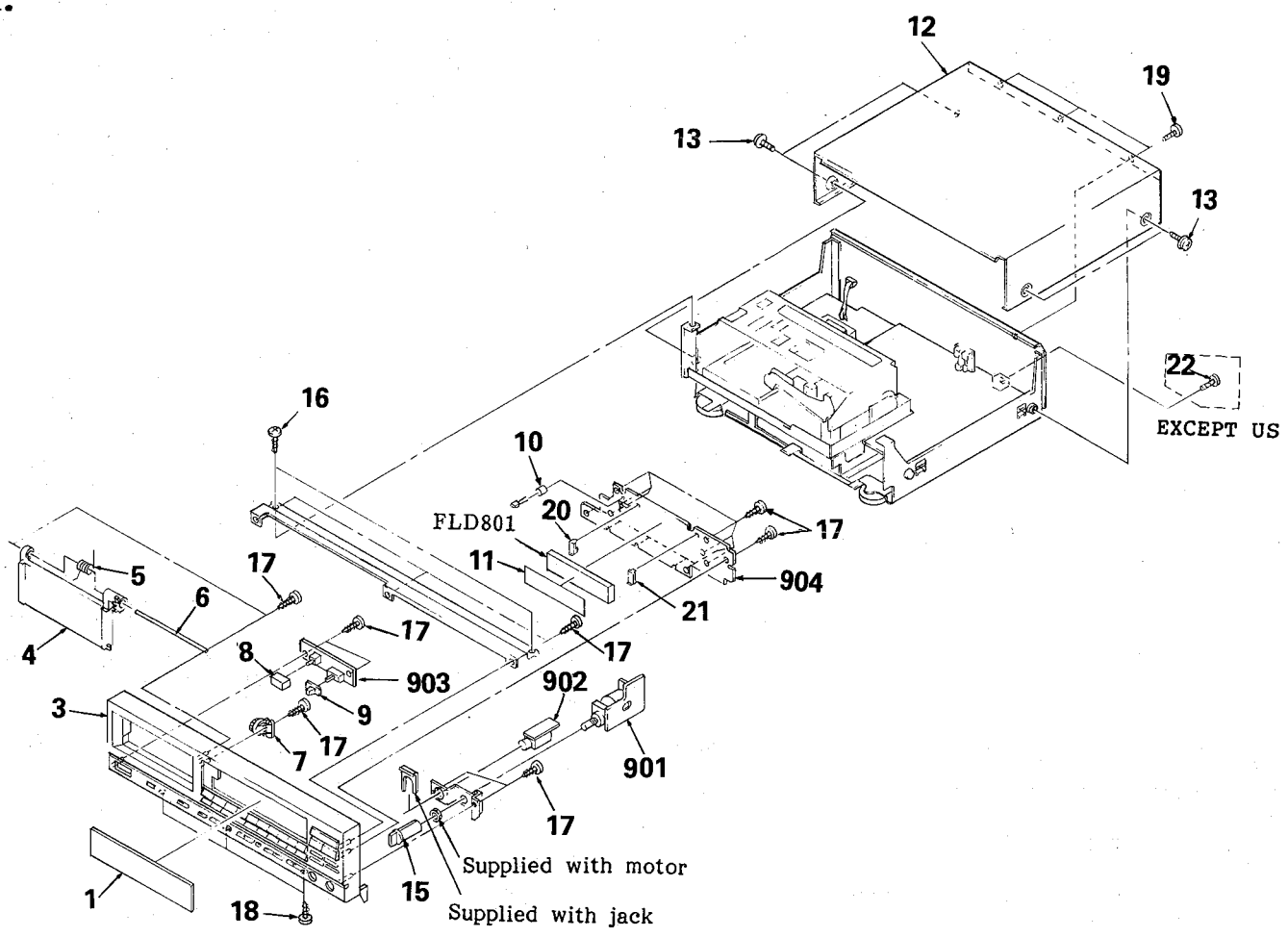

No.	Part No.	Description	Remarks
1	4-924-498-01	PLATE, INDICATION	
3	X-4924-415-2	(Canadian)...PANEL ASSY, FRONT	
	X-4924-416-1	(US).....PANEL ASSY, FRONT	
	X-4924-417-1	(AEP,E)....PANEL ASSY, FRONT	
4	4-924-492-01	LID	
5	4-924-499-01	SPRING	
6	4-926-303-01	SHAFT (LID)	
7	4-919-393-01	DAMPER	
8	4-922-921-01	BUTTON (POWER)	
9	4-922-518-01	KNOB (TIMER)	
10	*4-923-532-01	SPACER, LED	
11	4-922-519-01	FILTER	
12	4-926-301-01	CASE	

No.	Part No.	Description	Remarks
13	3-704-366-01	SCREW (CASE) (M3X8)	
15	4-923-522-01	KNOB (B.TYPE), LOV	
16	7-682-147-01	SCREW +BVTT 3X6 (S)	
17	7-685-134-19	SCREW +BTP 2.6X8 TYPE2 N-S	
18	7-685-872-09	SCREW +BVTT 3X8 (S	
19	7-682-547-09	SCREW +BVTT 3X6 (S)	
20	*4-922-524-01	HOLDER (LEFT)	
21	*4-922-523-01	HOLDER (RIGHT)	
22	7-685-646-79	(EXCEPT US)..SCREW +BVTP 3X8 TYPE 2 N-S	
901	*1-626-946-11	PC BOARD, MOTOR	
902	*1-626-945-11	PC BOARD, HEADPHONE JACK	
903	*1-626-948-11	PC BOARD, POWER SWITCH	
904	*A-4655-071-A	MOUNTED PCB, DISPLAY	

5-2.

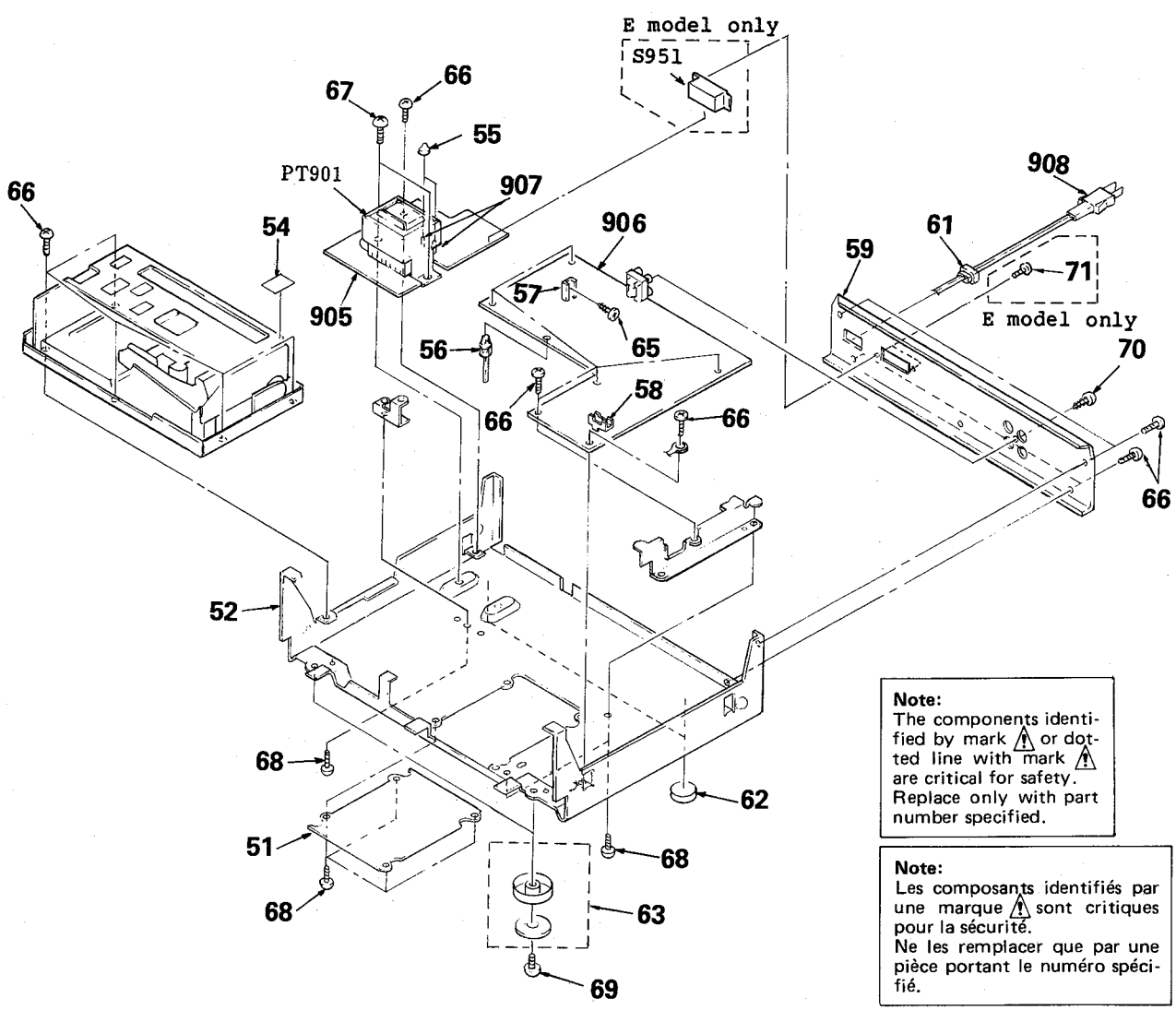

Note:
The components identified by mark ⚠ or dotted line with mark ⚠ are critical for safety. Replace only with part number specified.

Note:
Les composants identifiés par une marque ⚠ sont critiques pour la sécurité.
Ne les remplacer que par une pièce portant le numéro spécifié.

No.	Part No.	Description	Remarks
51	*4-924-497-01	PLATE, BOTTOM	
52	*4-926-302-01	CHASSIS	
53	*4-926-304-01	COVER	
54	4-911-357-01	INSULATOR	
55	*4-912-962-01	COVER (1P), TERMINAL	
56	*3-676-567-00	SPACER	
57	*3-309-144-01	HEAT SINK	
58	*4-922-525-01	HEAT SINK	
59	*4-924-404-11	(US).....PANEL, BACK	
	*4-924-404-21	(Canadian)...PANEL, BACK	
	*4-924-404-31	(AEP).....PANEL, BACK	
	*4-924-404-51	(E).....PANEL, BACK	
60	*4-923-506-01	BRACKET (PC BOARD)	
61	*3-703-244-00	(EXCEPT E)....BUSHING (2104), CORD	
	*3-703-571-11	(E).....BUSHING (S)(4516), CORD	
62	4-926-323-01	FOOT (DIA,30)	
63	X-4924-420-1	(US).....FOOT ASSY	
	X-4924-421-1	(EXCEPT US)...FOOT ASSY	
65	7-682-147-15	SCREW, TR	
66	7-682-147-01	SCREW +BVTT 3X6 (S)	
67	7-682-560-04	SCREW +BVTT 4X6 (S)	
68	7-682-547-09	SCREW +BVTT 3X6 (S)	
69	7-685-872-09	SCREW +BVTT 3X8 (S)	
70	4-909-982-01	SCREW, TAPPING	
71	7-685-646-79	(E).....SCREW +BVTP 3X8 TYPE2 N-S	
905	*1-626-943-11	PC BOARD, POWER TRANSFORMER	
906	*A-4651-201-A	(AEP).....MOUNTED PCB, MAIN	
	*A-4651-202-A	(US).....MOUNTED PCB, MAIN	
	*A-4651-203-A	(Canadian)...MOUNTED PCB, MAIN	
	*A-4651-204-A	(E).....MOUNTED PCB, MAIN	
907	1-535-416-00	TERMINAL	
908	⚠1-551-478-00	(US, Canadian)...CORD, POWER (POLAR.SPT-2)	
	⚠1-555-795-00	(AEP).....CORD, POWER, EULO PLUG	
	⚠1-551-188-XX	(E).....CORD, POWER	
PT901	⚠1-449-320-11	(US, Canadian)...TRANSFORMER, POWER	
	⚠1-449-321-11	(AEP)...TRANSFORMER, POWER	
	⚠1-449-322-11	(E).....TRANSFORMER, POWER	
S951	⚠1-571-309-11	(E).....SWITCH (VOLTAGE SELECTOR)	

5-3. MD (CDM10-5C)

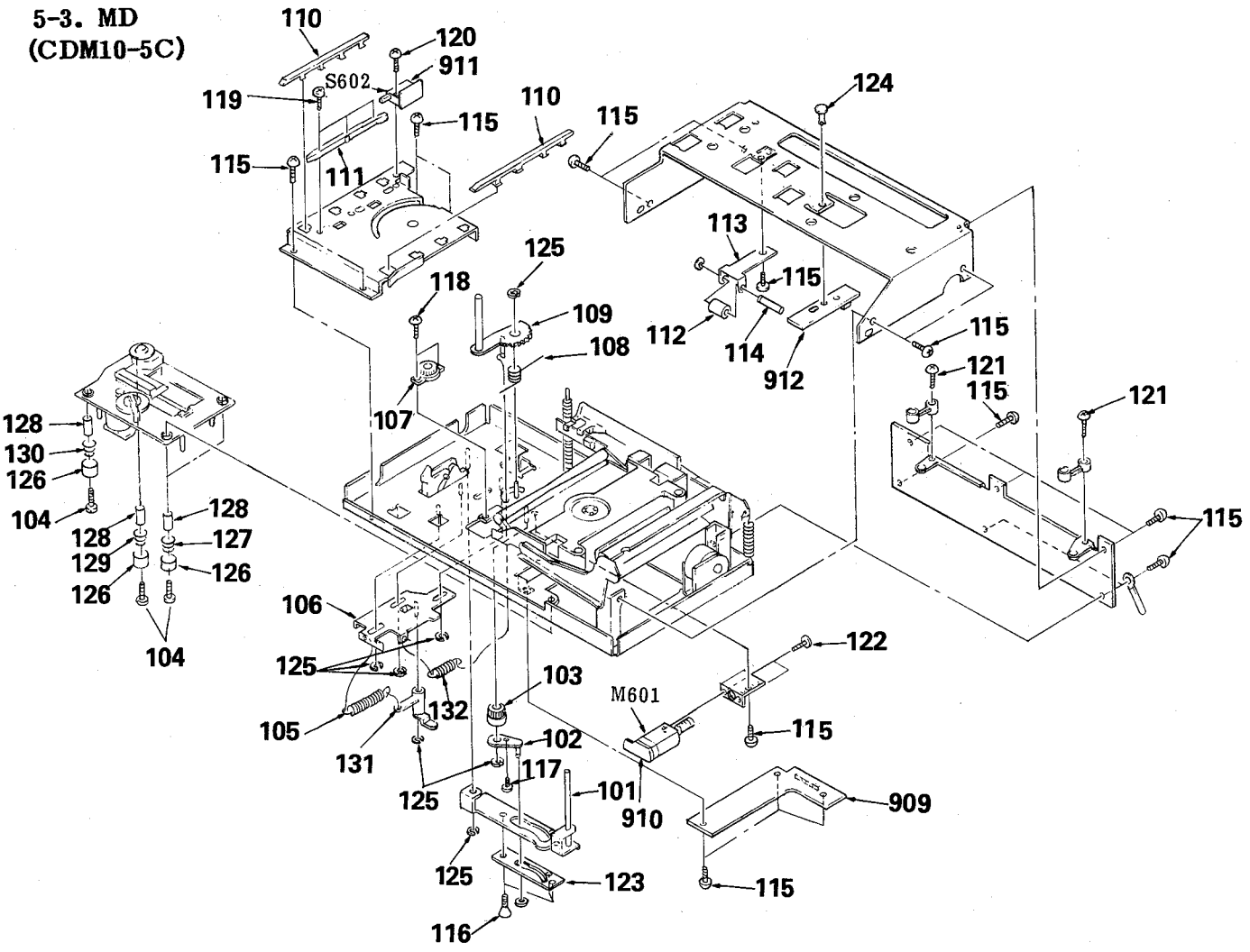

No.	Part No.	Description	Remarks
101	*X-4917-728-1	LEVER (D1) ASSY	
102	X-4917-733-1	LEVER (G) ASSY	
103	4-926-230-01	GEAR (P1)	
104	7-685-868-01	SCREW +BVTT 2.6X20 (S)	
105	4-926-213-01	SPRING (1), TENSION	
106	*X-4917-735-1	SLIDER (A) ASSY	
107	3-319-224-31	DAMPER, SMALL	
108	4-926-208-01	SPRING (EJECT)	
109	X-4917-729-1	LEVER (E) ASSY	
110	4-926-246-01	RAIL	
111	*4-926-247-01	GUIDE	
112	4-926-248-01	ROLLER (P)	
113	*4-920-297-01	SPRING (M)	
114	4-926-262-01	SHAFT (M)	
115	7-682-147-01	SCREW +BVTT 3X6 (S)	
116	7-682-245-09	SCREW +K 3X4	
117	7-685-103-19	SCREW +P 2X5 TYPE2 NON-SLIT	
118	7-621-255-25	SCREW +BVTT 2X4 (S)	
119	7-685-782-09	SCREW +PTT 2X5 (S)	

No.	Part No.	Description	Remarks
120	7-621-773-87	SCREW +BVTT 2.6X10 (S)	
121	7-682-548-04	SCREW +BVTT 3X8 (S)	
122	7-621-772-00	SCREW +B 2X3	
123	4-926-210-01	LEVER (D2)	
124	*3-531-576-11	RIVET	
125	7-624-106-04	STOP RING 3.0, TYPE -E	
126	4-917-508-01	HOLDER, SP	
127	4-917-507-01	SPRING (H)	
128	*4-926-249-01	COLLAR	
129	4-917-541-01	SPRING (B)	
130	4-918-669-01	SPRING (W)	
131	4-926-244-01	LEVER (EJECT)	
132	4-926-201-01	SPRING (2), TENSION	
909	*1-626-876-11	PC BOARD, TRANSLATION	
910	*1-626-867-11	PC BOARD, M1 MOTOR	
911	*1-626-871-11	PC BOARD, S1 SWITCH	
912	*1-626-866-11	PC BOARD, LED	
M601	A-4608-356-A	ASSY MOTOR (PACK EJECT/LEVER OUT)	
S602	1-554-205-00	SWITCH, PUSH (PST)	

5-4. MD(CDM10-5C)

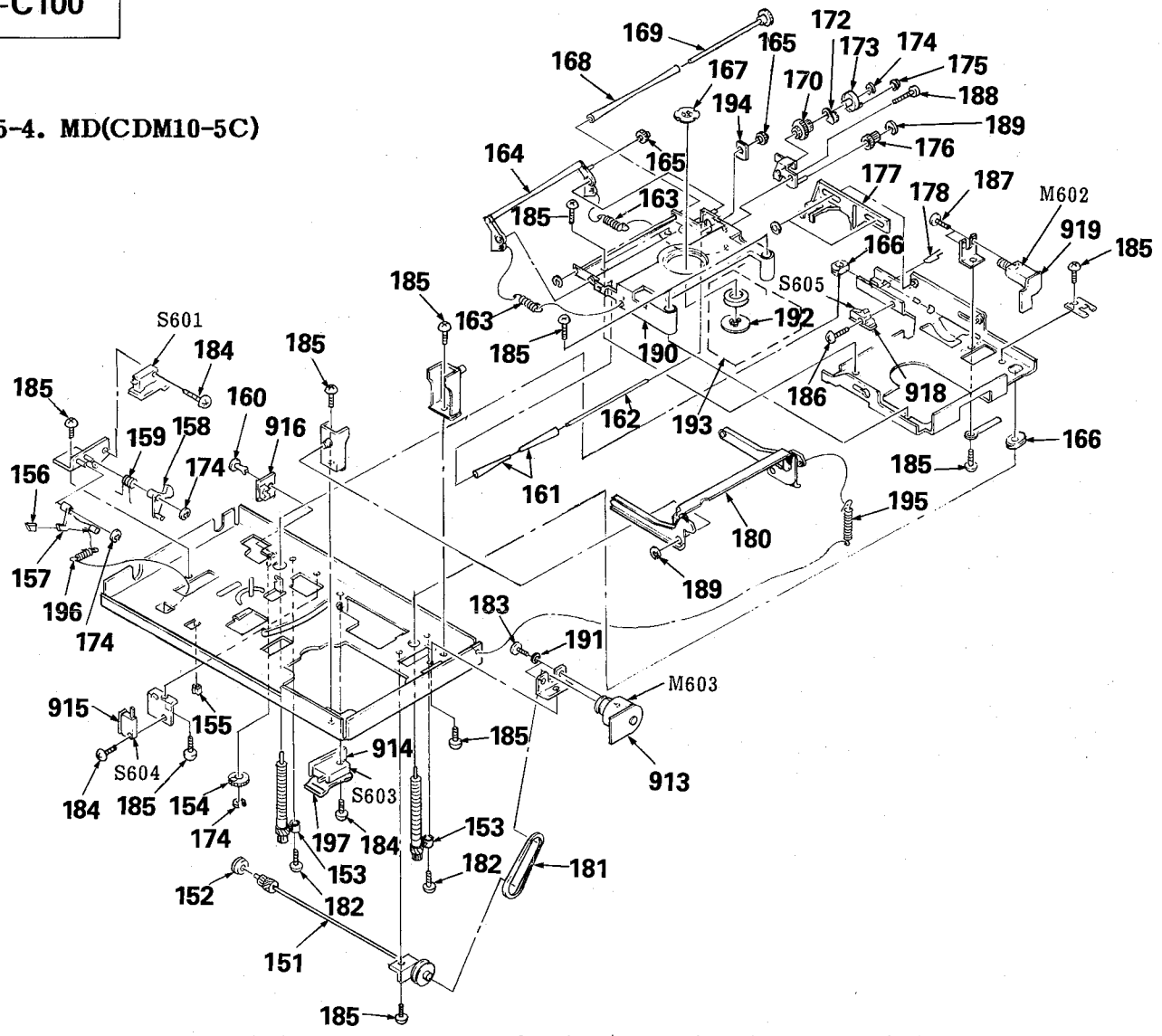

No.	Part No.	Description	Remarks
151	A-4675-265-A	GEAR ASSY	
152	4-926-211-01	BEARING	
153	*A-4675-264-A	SCREW ASSY	
154	4-926-232-01	GEAR (S)	
155	4-887-175-00	RUBBER, STOPPER	
156	4-926-215-01	HOLDER	
157	4-926-209-01	LEVER (STOP)	
158	4-926-245-01	LEVER (P)	
159	4-920-299-01	SPRING (LOCK)	
160	*3-531-576-11	RIVET	
161	X-3329-518-1	ROLLER (UPPER) ASSY	
162	4-926-264-01	SHAFT (P)	
163	4-926-214-01	SPRING (3), TENSION	
164	A-4675-273-A	ROLLER ASSY, RUBBER	
165	4-926-235-01	GEAR (R3)	
166	4-926-241-02	HOLDER (E2)	
167	4-921-022-01	PULLEY, CHUCKING	
168	3-323-231-02	ROLLER (LOWER)	
169	A-4675-275-A	GEAR (R1) ASSY	
170	4-926-234-01	GEAR (R2)	
171	*X-4917-737-1	HOLDER (G) ASSY	
172	A-4675-276-A	GEAR ASSY, PLANET	
173	4-926-239-01	GEAR (R7)	
174	7-624-105-04	STOP RING 2.3, TYPE -E	
175	4-926-250-01	ROLLER (S)	
176	4-926-238-01	GEAR (R6)	
177	4-920-289-01	SLIDER (B)	
178	4-920-298-01	SPRING (CLIP)	
179	*X-4917-738-3	CHASSIS (E) ASSY	
180	*A-4675-256-A	ARM ASSY	

No.	Part No.	Description	Remarks
181	4-920-288-01	BELT	
182	7-682-548-04	SCREW +BVTT 3X8 (S)	
183	7-621-775-00	SCREW +B 2.6X3	
184	7-621-773-87	SCREW +BVTT 2.6X10 (S)	
185	7-682-147-01	SCREW +BVTT 3X6 (S)	
186	7-627-553-78	SCREW, PRECISION +P 2X10	
187	7-621-772-00	SCREW +B 2X3	
188	7-685-103-19	SCREW +P 2X5 TYPE2 NON-SLIT	
189	7-624-106-04	STOP RING 3.0, TYPE -E	
190	X-4917-726-2	ESCUTCHEON (L) ASSY	
191	7-688-002-03	W 2.6, SMALL	
192	4-918-673-01	YOKE, CHUCKING	
193	A-4665-012-C	MAGNET ASSY	
194	4-926-217-01	HOLDER (E6)	
195	4-926-202-01	SPRING (4), TENSION	
196	4-926-203-01	SPRING (5), TENSION	
197	4-926-590-01	HOLDER (S)	
913	*1-626-869-11	PC BOARD, M3 MOTOR	
914	*1-626-872-11	PC BOARD, S2 SWITCH	
915	*1-626-873-11	PC BOARD, S3 SWITCH	
916	*1-626-875-11	PC BOARD, HS SENSOR	
917	1-626-870-11	PC BOARD, SO SWITCH	
918	*1-626-874-11	PC BOARD, S4 SWITCH	
919	*1-626-868-11	PC BOARD, M2 MOTOR	
M602	X-4308-360-A	ASSY MOTOR (SAVE/LOAD)	
M603	X-4608-358-A	ASSY MOTOR (ELEVATOR UP/DOWN)	
S601	1-554-205-00	SWITCH, PUSH (EJECT)	
S603	1-554-205-00	SWITCH, PUSH (LOT)	
S604	1-554-205-00	SWITCH, PUSH (HOME)	
S605	1-570-886-11	SWITCH, MICRO (LOAD IN DET)	

5-5. OPTICAL PICK-UP BLOCK (BU-5C)

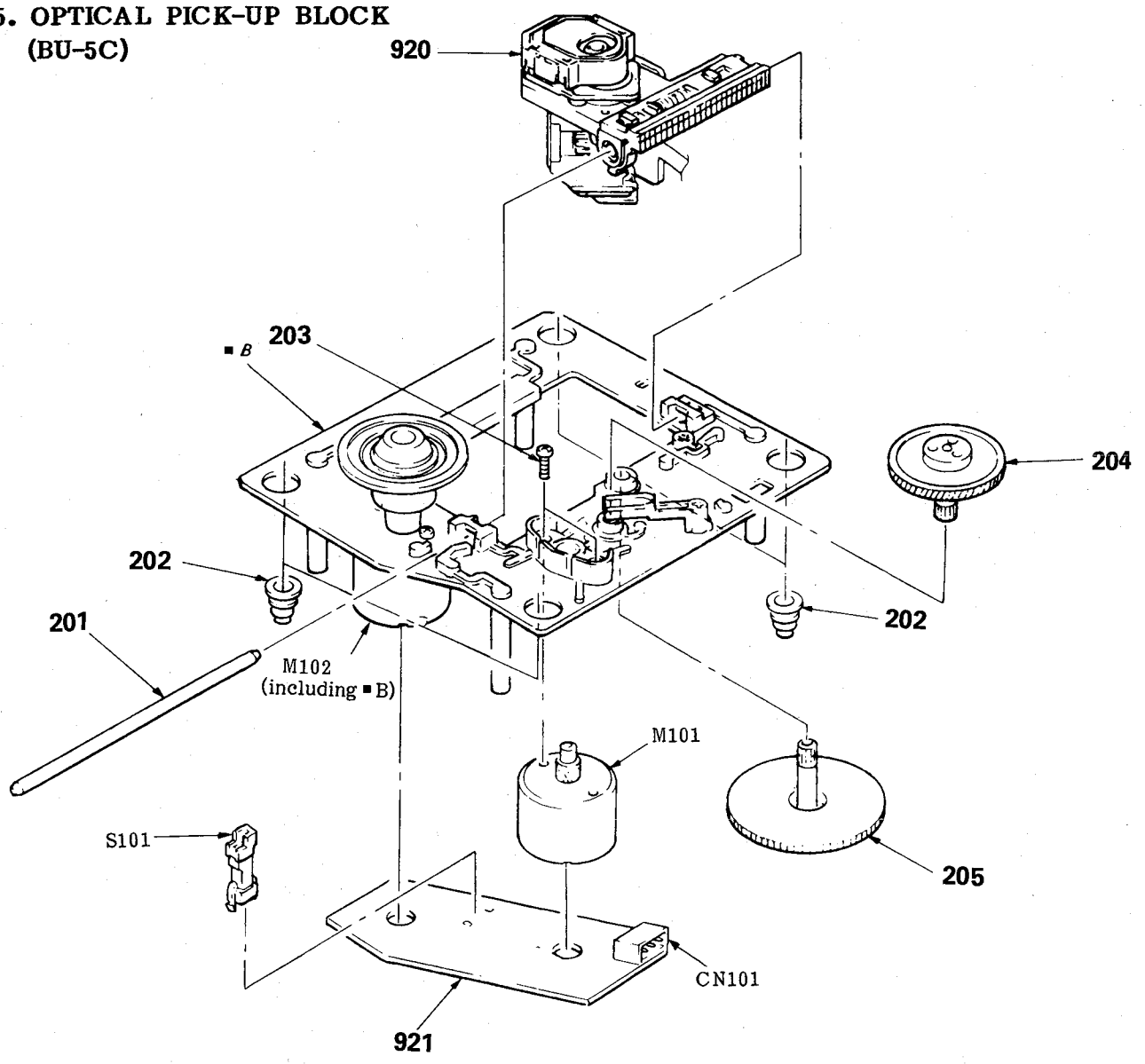

No.	Part No.	Description	Remarks
201	4-917-565-01	SHAFT, SLED	
202	4-917-562-01	INSULATOR	
203	7-621-255-15	SCREW +P 2X3	
204	4-917-567-01	GEAR (M)	
205	4-917-564-01	GEAR (P), FLATNESS	

No.	Part No.	Description	Remarks
920	⚠8-848-062-01	PICKUP, OPTICS KSS-150A	
921	*1-626-304-11	PC BOARD, SL/SP MOTOR	
CNJ101	*1-564-720-21	PIN, CONNECTOR (SMALL TYPE) 4P	
M101	X-4917-523-1	ASSY MOTOR (SPINDLE)	
M102	X-4917-504-1	ASSY MOTOR (SLED)	
S101	1-571-274-11	SWITCH, LEAF (LIMIT)	

Note:
The components identified by mark ⚠ or dotted line with mark ⚠ are critical for safety. Replace only with part number specified.

Note:
Les composants identifiés par une marque ⚠ sont critiques pour la sécurité. Ne les remplacer que par une pièce portant le numéro spécifié.

SECTION 6
ELECTRICAL PARTS LIST

NOTE:

- Due to standardization, replacements in the parts list may be different from the parts specified in the diagrams or the components used on the set.
- Items marked "★" are not stocked since they are seldom required for routine service. Some delay should be anticipated when ordering these items.
- If there are two or more same circuits in a set such as a stereophonic machine, only typical circuit parts may be indicated and capacitors and resistors in other same circuits may be omitted.

CAPACITORS:
MF: μF, PF: μμF.

RESISTORS
- All resistors are in ohms.
- F: nonflammable

COILS
- MMH: mH, UH: μH

SEMICONDUCTORS
In each case, U: μ, for example:
UA...: μA..., UPA...: μPA...,
UPC...: μPC, UPD...: μPD...

The components identified by mark ⚠ or dotted line with mark ⚠ are critical for safety.
Replace only with part number specified.

Les composants identifiés par une marque ⚠ sont critiques pour la sécurité.
Ne les remplacer que par une pièce portant le numéro spécifié.

Ref.No.	Part No.	Description
901	*1-626-946-11	PC BOARD, MOTOR
902	*1-626-945-11	PC BOARD, HEADPHONE JACK
903	*1-626-948-11	PC BOARD, POWER SWITCH
904	*A-4655-071-A	MOUNTED PCB, DISPLAY
905	*1-626-943-11	PC BOARD, POWER TRANSFORMER
906	*A-4651-201-A	(AEP).....MOUNTED PCB, MAIN
	*A-4651-202-A	(US).....MOUNTED PCB, MAIN
	*A-4651-203-A	(Canadian)...MOUNTED PCB, MAIN
	*A-4651-204-A	(E).....MOUNTED PCB, MAIN
907	1-535-416-00	TERMINAL
908	⚠1-551-478-00	(US, Canadian)...CORD, POWER (POLAR.SPT-2)
	⚠1-551-188-XX	(E).....CORD, POWER
	⚠1-555-795-00	(AEP).....CORD, POWER, EULO PLUG
909	*1-626-876-11	PC BOARD, TRANSLATION
910	*1-626-867-11	PC BOARD, M1 MOTOR
911	*1-626-871-11	PC BOARD, S1 SWITCH
912	*1-626-866-11	PC BOARD, LED
913	*1-626-869-11	PC BOARD, M3 MOTOR
914	*1-626-872-11	PC BOARD, S2 SWITCH
915	*1-626-873-11	PC BOARD, S3 SWITCH
916	*1-626-875-11	PC BOARD, HS SENSOR
917	*1-626-870-11	PC BOARD, S0 SWITCH
918	*1-626-874-11	PC BOARD, S4 SWITCH
919	*1-626-868-11	PC BOARD, M2 MOTOR
920	8-848-062-01	PICKUP, OPTICS KSS-150A
921	*1-626-304-11	PC BOARD, SL/SP MOTOR

C103	1-108-796-11	MYLAR	0.0022MF	5%	50V
C102	1-124-443-00	ELECT	100MF	20%	6.3V
C101	1-162-294-31	CERAMIC	0.001MF	10%	50V
C104	1-108-796-11	MYLAR	0.0022MF	5%	50V
C105	1-162-198-31	CERAMIC	8.2PF	10%	50V
C106	1-126-233-11	ELECT	22MF	20%	25V
C107	1-130-477-00	MYLAR	0.0033MF	5%	50V
C108	1-136-159-00	FILM	0.033MF	5%	50V
C109	1-126-233-11	ELECT	22MF	20%	25V
C110	1-136-159-00	FILM	0.033MF	5%	50V
C111	1-136-153-00	FILM	0.01MF	5%	50V
C112	1-126-233-11	ELECT	22MF	20%	25V
C113	1-161-375-00	CERAMIC	0.0022MF	20%	16V
C114	1-161-377-00	CERAMIC	0.0047MF	30%	16V
C115	1-124-902-00	ELECT	0.47MF	20%	50V
C201	1-124-478-11	ELECT	100MF	20%	25V
C202	1-124-478-11	ELECT	100MF	20%	25V
C203	1-136-165-00	FILM	0.1MF	5%	50V
C204	1-136-165-00	FILM	0.1MF	5%	50V
C205	1-136-165-00	FILM	0.1MF	5%	50V
C206	1-136-165-00	FILM	0.1MF	5%	50V
C207	1-124-478-11	ELECT	100MF	20%	25V
C208	1-124-478-11	ELECT	100MF	20%	25V
C209	1-136-169-00	FILM	0.22MF	5%	50V
C211	1-161-379-00	CERAMIC	0.01MF	20%	16V
C212	1-123-875-11	ELECT	10MF	20%	50V
C213	1-136-165-00	FILM	0.1MF	5%	50V
C214	1-123-382-00	ELECT	3.3MF	20%	50V
C215	1-136-159-00	FILM	0.033MF	5%	50V
C216	1-136-165-00	FILM	0.1MF	5%	50V
C217	1-162-282-31	CERAMIC	100PF	10%	50V
C218	1-126-233-11	ELECT	22MF	20%	25V
C219	1-162-294-31	CERAMIC	0.001MF	10%	50V
C220	1-126-233-11	ELECT	22MF	20%	25V
C221	1-124-927-11	ELECT	4.7MF	20%	50V
C222	1-130-479-00	MYLAR	0.0047MF	5%	50V
C223	1-136-165-00	FILM	0.1MF	5%	50V
C224	1-124-499-11	ELECT	1MF	20%	50V
C225	1-126-233-11	ELECT	22MF	20%	25V
C301	1-161-379-00	CERAMIC	0.01MF	20%	16V
C302	1-124-902-00	ELECT	0.47MF	20%	50V
C303	1-136-159-00	FILM	0.033MF	5%	50V
C304	1-126-233-11	ELECT	22MF	20%	25V
C305	1-126-233-11	ELECT	22MF	20%	25V
C306	1-126-233-11	ELECT	22MF	20%	25V
C307	1-161-379-00	CERAMIC	0.01MF	20%	16V
C308	1-161-379-00	CERAMIC	0.01MF	20%	16V
C311	1-126-233-11	ELECT	22MF	20%	25V
C312	1-126-233-11	ELECT	22MF	20%	25V
C313	1-162-210-31	CERAMIC	30PF	5%	50V
C314	1-162-210-31	CERAMIC	30PF	5%	50V
C315	1-130-471-00	MYLAR	0.001MF	5%	50V
C316	1-136-169-00	FILM	0.22MF	5%	50V
C317	1-124-499-11	ELECT	1MF	20%	50V
C351	1-126-233-11	(EXCEPT US).. ELECT	22MF	20%	25V
C352	1-162-282-11	(EXCEPT US)..CERAMIC	100PF	10%	50V
C353	1-126-233-11	(EXCEPT US)..ELECT	22MF	20%	25V
C401	1-126-233-11	ELECT	22MF	20%	25V
C402	1-162-203-31	CERAMIC	15PF	5%	50V
C403	1-162-203-31	CERAMIC	15PF	5%	50V
C404	1-226-233-11	ELECT	22MF	20%	25V
C405	1-126-176-11	ELECT	220MF	20%	6.3V
C406	1-126-176-11	ELECT	220MF	20%	6.3V
C451	1-161-494-00	CERAMIC	0.022MF		25V
C452	1-161-494-00	CERAMIC	0.022MF		25V
C453	1-161-494-00	CERAMIC	0.022MF		25V
C454	1-161-494-00	CERAMIC	0.022MF		25V
C455	1-161-494-00	CERAMIC	0.022MF		25V
C456	1-161-494-00	CERAMIC	0.022MF		25V

Ref.No.	Part No.	Description			
C457	1-162-851-11	CERAMIC	0.1MF	20%	16V
C458	1-162-290-31	CERAMIC	470PF	10%	50V
C459	1-130-473-00	MYLAR	0.0015MF	5%	50V
C460	1-126-103-11	ELECT	470MF	20%	16V
C461	1-124-929-11	ELECT	22MF	20%	63V
C462	1-136-158-00	FILM	0.027MF	5%	50V
C463	1-130-471-00	MYLAR	0.001MF	5%	50V
C551	1-161-494-00	CERAMIC	0.022MF		25V
C552	1-161-494-00	CERAMIC	0.022MF		25V
C553	1-161-494-00	CERAMIC	0.022MF		25V
C554	1-161-494-00	CERAMIC	0.022MF		25V
C555	1-161-494-00	CERAMIC	0.022MF		25V
C556	1-161-494-00	CERAMIC	0.022MF		25V
C557	1-162-851-11	CERAMIC	0.1MF	20%	16V
C559	1-130-473-00	MYLAR	0.0015MF	5%	50V
C560	1-126-103-11	ELECT	470MF	20%	16V
C561	1-124-929-11	ELECT	22MF	20%	63V
C562	1-136-158-00	FILM	0.027MF	5%	50V
C563	1-130-471-00	MYLAR	0.001MF	5%	50V
C601	1-136-165-00	FILM	0.1MF	5%	50V
C602	1-136-165-00	FILM	0.1MF	5%	50V
C603	1-136-165-00	FILM	0.1MF	5%	50V
C701	1-124-472-11	ELECT	470MF	20%	10V
C702	1-162-851-11	CERAMIC	0.1MF	20%	16V
C703	1-162-290-31	CERAMIC	470PF	10%	50V
C705	1-124-443-00	ELECT	100MF	20%	10V
C706	1-124-443-00	ELECT	100MF	20%	10V
C751	1-124-472-11	ELECT	470MF	20%	10V
C753	1-162-290-31	CERAMIC	470PF	10%	50V
C801	1-162-207-31	CERAMIC	22PF	5%	50V
C802	1-162-207-31	CERAMIC	22PF	5%	50V
C803	1-161-379-00	CERAMIC	0.01MF	20%	16V
C804	1-123-661-00	ELECT	100MF	20%	6.3V
C901	1-124-887-00	ELECT	3300MF	20%	16V
C902	1-124-898-11	ELECT	4700MF	20%	16V
C903	1-123-875-11	ELECT	10MF	20%	50V
C904	1-123-875-11	ELECT	10MF	20%	50V
C905	1-124-472-11	ELECT	470MF	20%	10V
C906	1-124-472-11	ELECT	470MF	20%	10V
C908	1-126-244-51	ELECT	47000MF		5.5V
C909	1-126-103-11	ELECT	470MF	20%	16V
C910	1-124-564-11	ELECT	4700MF	20%	25V
C911	1-124-572-11	ELECT	100MF	20%	63V
C912	1-124-122-11	ELECT	100MF	20%	50V
C913	1-124-927-11	ELECT	4.7MF	20%	50V
C914	1-124-927-11	ELECT	4.7MF	20%	50V
C915	1-124-122-11	ELECT	100MF	20%	50V
C916	1-124-122-11	ELECT	100MF	20%	50V
C917	1-124-122-11	ELECT	100MF	20%	50V
C918	1-124-912-11	ELECT	330MF	20%	50V
C919	1-124-499-11	ELECT	1MF	20%	50V
C920	1-162-290-31	CERAMIC	470PF	10%	50V
C921	1-124-927-11	ELECT	4.7MF	20%	50V
C951	⚠1-162-599-12	CERAMIC	0.0047MF	20%	400V
CNJ101	*1-564-720-21	PIN, CONNECTOR (SMALL TYPE) 4P			
CNJ351	1-566-922-11	(EXCEPT US).....JACK, PIN 4P (DIGITAL OUTPUT)			
CNJ451	1-566-817-11	JACK, PIN 4P (LINE OUTPUT)			

Ref.No.	Part No.	Description
CNP101	*1-564-706-31	PIN, CONNECTOR (SMALL TYPE) 4P
CNP102	*1-564-710-11	PIN, CONNECTOR (SMALL TYPE) 8P
CNP201	*1-564-706-31	PIN, CONNECTOR (SMALL TYPE) 4P
CNP202	*1-564-706-31	PIN, CONNECTOR (SMALL TYPE) 4P
CNP301	*1-506-503-11	PIN, CONNECTOR 9P
CNP302	*1-564-340-00	PIN, CONNECTOR 6P
CNP401	*1-564-705-11	PIN, CONNECTOR (SMALL TYPE) 3P
CNP402	*1-564-708-11	PIN, CONNECTOR (SMALL TYPE) 6P
CNP403	*1-564-336-00	PIN, CONNECTOR 2P
CNP601	*1-564-495-11	PIN, CONNECTOR 2P
CNP602	*1-564-495-11	PIN, CONNECTOR 2P
CNP603	1-564-519-11	PLUG, CONNECTOR 4P
CNP604	*1-564-495-11	PIN, CONNECTOR 2P
CNP605	*1-564-497-11	PIN, CONNECTOR 4P
CNP606	*1-564-495-11	PIN, CONNECTOR 2P
CNP607	*1-564-495-11	PIN, CONNECTOR 2P
CNP608	*1-564-336-71	PIN, CONNECTOR 2P
CNP609	*1-564-336-81	PIN, CONNECTOR 2P
CNP610	*1-564-496-11	PIN, CONNECTOR 3P
CNP611	1-564-519-11	PLUG, CONNECTOR 4P
CNP703	*1-564-337-00	PIN, CONNECTOR 3P
CNP801	*1-564-666-11	PIN, CONNECTOR 10P
CNP802	*1-564-340-61	PIN, CONNECTOR 6P
CNP803	*1-564-341-11	PIN, CONNECTOR 7P
CNP901	*1-564-511-11	PLUG, CONNECTOR 8P
D101	8-719-940-76	DIODE 1SS132
D301	8-719-933-57	DIODE HZS9B2L
D302	8-719-933-57	DIODE HZS9B2L
D303	8-719-933-57	DIODE HZS9B2L
D304	8-719-933-36	DIODE HZS6B1L
D305	8-719-940-76	DIODE 1SS132
D306	8-719-940-76	DIODE 1SS132
D401	8-719-940-76	DIODE 1SS132
D601	8-719-107-82	DIODE SE303AY
D602	8-719-107-82	DIODE SE303AY
D801	8-719-949-37	DIODE AY3638S
D901	8-719-200-02	DIODE 10E2
D902	8-719-200-02	DIODE 10E2
D903	8-719-200-02	DIODE 10E2
D904	8-719-200-02	DIODE 10E2
D905	8-719-940-76	DIODE 1SS132
D906	8-719-940-76	DIODE 1SS132
D907	8-719-200-02	DIODE 10E2
D908	8-719-200-02	DIODE 10E2
D910	8-719-940-76	DIODE 1SS132
D911	8-719-928-81	DIODE HZS4.3NB2
D912	8-719-933-57	DIODE HZS9B2L
D913	8-719-940-76	DIODE 1SS132
D914	8-719-200-02	DIODE 10E2
D915	8-719-200-02	DIODE 10E2
D916	8-719-200-02	DIODE 10E2
D917	8-719-200-02	DIODE 10E2
D918	8-719-940-76	DIODE 1SS132
D919	8-719-940-76	DIODE 1SS132
D920	8-719-940-76	DIODE 1SS132
FLD801	1-519-456-11	INDICATOR TUBE, FLUORESCENT

Ref.No.	Part No.	Description
IC101	8-752-031-80	IC CXA1081S
IC201	8-759-803-42	IC LA6500-FA
IC202	8-759-805-18	IC LA6520
IC203	8-752-032-33	IC CXA1182S
IC301	8-759-947-02	IC CXD1125Q
IC302	8-752-320-44	IC CXK5816M-10L
IC303	8-759-630-87	IC M50740A-425SP
IC304	8-759-820-64	IC LC9600R-183
IC305	8-759-630-79	IC M50747-443SP
IC306	8-759-802-32	IC LB1649
IC307	8-759-802-32	IC LB1649
IC308	8-759-220-04	IC TC40H004P
IC351	8-759-605-44	(EXCEPT US).....IC M74HC6004P
IC401	8-759-939-35	IC CXD1088Q
IC402	8-759-939-94	IC TDA1541-N5
IC403	8-759-601-02	IC M5218P
IC701	8-759-700-74	IC NJM4556S
IC801	8-752-805-41	IC CXP5058H-094Q
IC802	8-749-920-03	IC GP1U52
IC901	8-759-630-21	IC M5290P-16
IC902	8-759-602-02	IC M5219P
IC903	8-759-602-66	IC M5230L-A
J701	1-563-485-21	JACK, LARGE TYPE (HEADPHONES)
L351	*1-410-858-11	(EXCEPT US).....INDUCTOR, SMALL TYPE
M101	X-4917-523-1	ASSY MOTOR (SPINDLE)
M102	X-4917-504-1	ASSY MOTOR (SLED)
M601	A-4608-356-A	ASSY MOTOR (PACK EJECT/LEVER OUT)
M602	X-4308-360-A	ASSY MOTOR (SAVE/LOAD)
M603	X-4608-358-A	ASSY MOTOR (ELEVATOR UP/DOWN)
PS201-PS204	⚠1-532-675-00	(AEP,E)...LINK, IC
PS901-PS903	⚠1-532-675-00	(AEP,E)...LINK, IC
PS904,PS905	⚠1-532-685-00	(AEP,E)...LINK, IC
PT901	⚠1-449-320-11	(US,Canadian).....TRANSFORMER, POWER
	⚠1-449-321-11	(AEP).....TRANSFORMER, POWER
	⚠1-449-322-11	(E).....TRANSFORMER, POWER
Q101	8-729-103-43	TRANSISTOR 2SB734
Q201	8-729-806-28	TRANSISTOR 2SC3402
Q202	8-729-806-38	TRANSISTOR 2SC3399
Q401	8-729-806-20	TRANSISTOR 2SA1345
Q402	8-729-806-20	TRANSISTOR 2SA1345
Q403	8-729-806-38	TRANSISTOR 2SC3399
Q450	8-729-107-99	TRANSISTOR 2SC3622A-K
Q451	8-729-806-32	TRANSISTOR 2SC3860
Q452	8-729-806-32	TRANSISTOR 2SC3860
Q550	8-729-107-99	TRANSISTOR 2SC3622A-K
Q551	8-729-806-32	TRANSISTOR 2SC3860
Q552	8-729-806-32	TRANSISTOR 2SC3860
Q601	8-719-941-80	TRANSISTOR GP1S53
Q602	8-729-904-10	TRANSISTOR PT360FS
Q603	8-729-904-10	TRANSISTOR PT360FS
Q801	8-729-902-11	TRANSISTOR 2SC2021
Q802	8-729-806-28	TRANSISTOR 2SC3402
Q901	8-729-808-76	TRANSISTOR 2SD1913SA
Q902	8-729-820-15	TRANSISTOR 2SB1274-RS
Q903	8-729-103-43	TRANSISTOR 2SB734
Q904	8-729-806-38	TRANSISTOR 2SC3399
Q905	8-729-806-38	TRANSISTOR 2SC3399
Q906	8-729-806-38	TRANSISTOR 2SC3399
Q907	8-729-806-20	TRANSISTOR 2SA1345
Q908	8-729-802-22	TRANSISTOR 2SB1014
Q909	8-729-806-20	TRANSISTOR 2SA1345

Ref.No.	Part No.	Description			
R101	1-247-806-11	CARBON	91	5%	1/4W
R102	1-214-092-00	METAL	22	1%	1/4W
R103	1-249-417-11	CARBON	1K	5%	1/4W
R104	1-249-433-11	CARBON	22K	5%	1/4W
R105	1-249-421-11	CARBON	2.2K	5%	1/4W
R106	1-249-428-11	CARBON	8.2K	5%	1/4W
R107	1-247-860-11	CARBON	16K	5%	1/4W
R108	1-249-425-11	CARBON	4.7K	5%	1/4W
R109	1-249-425-11	CARBON	4.7K	5%	1/4W
R110	1-249-432-11	CARBON	18K	5%	1/4W
R111	1-249-432-11	CARBON	18K	5%	1/4W
R112	1-249-441-11	CARBON	100K	5%	1/4W
R201	1-249-436-11	CARBON	39K	5%	1/4W
R202	1-249-437-11	CARBON	47K	5%	1/4W
R203	1-249-385-11	CARBON	2.2	5%	1/4W
R204	1-249-393-11	CARBON	10	5%	1/4W
R205	1-249-393-11	CARBON	10	5%	1/4W
R206	1-249-393-11	CARBON	10	5%	1/4W
R207	1-249-438-11	CARBON	56K	5%	1/4W
R208	1-249-424-11	CARBON	3.9K	5%	1/4W
R209	1-249-425-11	CARBON	4.7K	5%	1/4W
R210	1-249-429-11	CARBON	10K	5%	1/4W
R211	1-249-423-11	CARBON	3.3K	5%	1/4W
R212	1-247-882-11	CARBON	130K	5%	1/4W
R213	1-247-896-11	CARBON	510K	5%	1/4W
R214	1-249-435-11	CARBON	33K	5%	1/4W
R215	1-247-889-00	CARBON	270K	5%	1/4W
R216	1-249-440-11	CARBON	82K	5%	1/4W
R217	1-249-441-11	CARBON	100K	5%	1/4W
R218	1-215-434-00	METAL	3.6K	1%	1/6W
R219	1-249-441-11	CARBON	100K	5%	1/4W
R220	1-249-433-11	CARBON	22K	5%	1/4W
R221	1-249-414-11	CARBON	560	5%	1/4W
R222	1-249-429-11	CARBON	10K	5%	1/4W
R301	1-215-469-00	METAL	100K	1%	1/6W
R302	1-215-469-00	METAL	100K	1%	1/6W
R303	1-249-429-11	CARBON	10K	5%	1/4W
R304	1-249-441-11	CARBON	100K	5%	1/4W
R305	1-249-429-11	CARBON	10K	5%	1/4W
R306	1-249-433-11	CARBON	22K	5%	1/4W
R307	1-249-417-11	CARBON	1K	5%	1/4W
R308	1-247-903-00	CARBON	1M	5%	1/4W
R309	1-249-437-11	CARBON	47K	5%	1/4W
R310	1-247-891-00	CARBON	330K	5%	1/4W
R311	1-249-437-11	CARBON	47K	5%	1/4W
R312	1-247-903-00	CARBON	1M	5%	1/4W
R313	1-249-437-11	CARBON	47K	5%	1/4W
R314	1-247-903-00	CARBON	1M	5%	1/4W
R315	1-249-429-11	CARBON	10K	5%	1/4W
R316	1-249-433-11	CARBON	22K	5%	1/4W
R317	1-249-433-11	CARBON	22K	5%	1/4W
R318	1-247-903-00	CARBON	1M	5%	1/4W
R319	1-247-903-00	CARBON	1M	5%	1/4W
R320	1-249-429-11	CARBON	10K	5%	1/4W
R322	1-249-429-11	CARBON	10K	5%	1/4W
R323	1-249-429-11	CARBON	10K	5%	1/4W
R324	1-249-429-11	CARBON	10K	5%	1/4W

Note:
The components identified by mark ⚠ or dotted line with mark ⚠ are critical for safety.
Replace only with part number specified.

Note:
Les composants identifiés par une marque ⚠ sont critiques pour la sécurité.
Ne les remplacer que par une pièce portant le numéro spécifié.

Ref.No.	Part No.	Description				
R325	1-249-429-11	CARBON	10K	5%	1/4W	
R326	1-249-429-11	CARBON	10K	5%	1/4W	
R327	1-249-429-11	CARBON	10K	5%	1/4W	
R328	1-249-429-11	CARBON	10K	5%	1/4W	
R329	1-249-429-11	CARBON	10K	5%	1/4W	
R330	1-249-411-11	CARBON	330	5%	1/4W	
R331	1-249-411-11	CARBON	330	5%	1/4W	
R332	1-249-411-11	CARBON	330	5%	1/4W	
R333	1-249-411-11	CARBON	330	5%	1/4W	
R334	1-249-429-11	CARBON	10K	5%	1/4W	
R340	1-249-429-11	CARBON	10K	5%	1/4W	
R341	1-249-429-11	CARBON	10K	5%	1/4W	
R342	1-249-429-11	CARBON	10K	5%	1/4W	
R343	1-249-429-11	CARBON	10K	5%	1/4W	
R344	1-249-429-11	CARBON	10K	5%	1/4W	
R345	1-249-417-11	(EXCEPT US)..CARBON	1K	5%	1/4W	
R346	1-249-429-11	CARBON	10K	5%	1/4W	
R347	1-249-429-11	CARBON	10K	5%	1/4W	
R349	1-247-891-00	CARBON	330K	5%	1/4W	
R350	1-247-883-00	CARBON	150K	5%	1/4W	
R351	1-249-412-11	(EXCEPT US)..CARBON	390	5%	1/4W	
R352	1-247-806-11	(EXCEPT US)..CARBON	91	5%	1/4W	
R401	1-249-411-11	CARBON	330	5%	1/4W	
R402	1-249-417-11	CARBON	1K	5%	1/4W	
R403	1-249-417-11	CARBON	1K	5%	1/4W	
R404	1-249-417-11	CARBON	1K	5%	1/4W	
R405	1-249-441-11	CARBON	100K	5%	1/4W	
R406	1-249-441-11	CARBON	100K	5%	1/4W	
R450	1-249-421-11	CARBON	2.2K	5%	1/4W	
R451	1-247-891-00	CARBON	330K	5%	1/4W	
R452	1-249-415-11	CARBON	680	5%	1/4W	
R453	1-249-415-11	CARBON	680	5%	1/4W	
R454	1-249-425-11	CARBON	4.7K	5%	1/4W	
R455	1-249-413-11	CARBON	470	5%	1/4W	
R456	1-247-903-00	CARBON	1M	5%	1/4W	
R457	1-249-415-11	CARBON	680	5%	1/4W	
R458	1-249-413-11	CARBON	470	5%	1/4W	
R459	1-249-399-11	CARBON	33	5%	1/4W	
R460	1-249-413-11	CARBON	470	5%	1/4W	
R550	1-249-421-11	CARBON	2.2K	5%	1/4W	
R551	1-247-891-00	CARBON	330K	5%	1/4W	
R552	1-249-415-11	CARBON	680	5%	1/4W	
R553	1-249-415-11	CARBON	680	5%	1/4W	
R554	1-249-425-11	CARBON	4.7K	5%	1/4W	
R555	1-249-413-11	CARBON	470	5%	1/4W	
R556	1-247-903-00	CARBON	1M	5%	1/4W	
R557	1-249-415-11	CARBON	680	5%	1/4W	
R558	1-249-413-11	CARBON	470	5%	1/4W	
R559	1-249-399-11	CARBON	33	5%	1/4W	
R560	1-249-413-11	CARBON	470	5%	1/4W	
R601	1-247-800-11	CARBON	51	5%	1/4W	
R602	1-249-409-11	CARBON	220	5%	1/4W	
R701	1-249-435-11	CARBON	33K	5%	1/4W	
R702	1-249-426-11	CARBON	5.6K	5%	1/4W	
R703	1-249-423-11	CARBON	3.3K	5%	1/4W	
R704	1-249-438-11	CARBON	56K	5%	1/4W	
R705	1-249-402-11	CARBON	56	5%	1/4W	
R751	1-249-435-11	CARBON	33K	5%	1/4W	

Ref.No.	Part No.	Description				
R752	1-249-426-11	CARBON	5.6K	5%	1/4W	
R753	1-249-423-11	CARBON	3.3K	5%	1/4W	
R754	1-249-438-11	CARBON	56K	5%	1/4W	
R755	1-249-402-11	CARBON	56	5%	1/4W	
R801	1-249-422-11	CARBON	2.7K	5%	1/4W	
R802	1-249-422-11	CARBON	2.7K	5%	1/4W	
R803	1-249-422-11	CARBON	2.7K	5%	1/4W	
R804	1-249-422-11	CARBON	2.7K	5%	1/4W	
R805	1-249-422-11	CARBON	2.7K	5%	1/4W	
R806	1-249-422-11	CARBON	2.7K	5%	1/4W	
R807	1-249-422-11	CARBON	2.7K	5%	1/4W	
R808	1-249-422-11	CARBON	2.7K	5%	1/4W	
R809	1-249-424-11	CARBON	3.9K	5%	1/4W	
R810	1-249-424-11	CARBON	3.9K	5%	1/4W	
R811	1-249-424-11	CARBON	3.9K	5%	1/4W	
R812	1-249-424-11	CARBON	3.9K	5%	1/4W	
R813	1-249-424-11	CARBON	3.9K	5%	1/4W	
R814	1-249-424-11	CARBON	3.9K	5%	1/4W	
R815	1-249-424-11	CARBON	3.9K	5%	1/4W	
R816	1-249-424-11	CARBON	3.9K	5%	1/4W	
R817	1-249-427-11	CARBON	6.8K	5%	1/4W	
R818	1-249-427-11	CARBON	6.8K	5%	1/4W	
R819	1-249-427-11	CARBON	6.8K	5%	1/4W	
R820	1-249-427-11	CARBON	6.8K	5%	1/4W	
R821	1-249-427-11	CARBON	6.8K	5%	1/4W	
R822	1-249-427-11	CARBON	6.8K	5%	1/4W	
R823	1-249-427-11	CARBON	6.8K	5%	1/4W	
R824	1-249-427-11	CARBON	6.8K	5%	1/4W	
R825	1-249-432-11	CARBON	18K	5%	1/4W	
R826	1-249-432-11	CARBON	18K	5%	1/4W	
R827	1-249-432-11	CARBON	18K	5%	1/4W	
R828	1-249-432-11	CARBON	18K	5%	1/4W	
R829	1-249-432-11	CARBON	18K	5%	1/4W	
R830	1-249-432-11	CARBON	18K	5%	1/4W	
R831	1-249-432-11	CARBON	18K	5%	1/4W	
R832	1-249-432-11	CARBON	18K	5%	1/4W	
R833	1-249-429-11	CARBON	10K	5%	1/4W	
R834	1-249-429-11	CARBON	10K	5%	1/4W	
R835	1-249-429-11	CARBON	10K	5%	1/4W	
R836	1-249-429-11	CARBON	10K	5%	1/4W	
R837	1-247-887-00	CARBON	220K	5%	1/4W	
R838	1-249-429-11	CARBON	10K	5%	1/4W	
R839	1-249-429-11	CARBON	10K	5%	1/4W	
R840	1-249-429-11	CARBON	10K	5%	1/4W	
R841	1-249-429-11	CARBON	10K	5%	1/4W	
R842	1-249-429-11	CARBON	10K	5%	1/4W	
R843	1-249-429-11	CARBON	10K	5%	1/4W	
R844	1-249-429-11	CARBON	10K	5%	1/4W	
R845	1-249-429-11	CARBON	10K	5%	1/4W	
R846	1-249-407-11	CARBON	150	5%	1/4W	
R901	1-249-425-11	CARBON	4.7K	5%	1/4W	
R902	1-249-425-11	CARBON	4.7K	5%	1/4W	
R903	1-249-423-11	CARBON	3.3K	5%	1/4W	
R905	1-249-405-11	CARBON	100	5%	1/4W	
R906	1-247-708-11	CARBON	470	5%	1/4W	
R907	1-249-417-11	CARBON	1K	5%	1/4W	
R908	⚠1-212-857-00	FUSIBLE	10	5%	1/4W	F

Note:
The components identified by mark ⚠ or dotted line with mark ⚠ are critical for safety. Replace only with part number specified.

Note:
Les composants identifiés par une marque ⚠ sont critiques pour la sécurité. Ne les remplacer que par une pièce portant le numéro spécifié.

Ref.No.	Part No.	Description
R909	1-249-434-11	CARBON 27K 5% 1/4W
R910	1-247-848-11	CARBON 5.1K 5% 1/4W
R911	1-249-429-11	CARBON 10K 5% 1/4W
R912	1-247-903-00	CARBON 1M 5% 1/4W
R913	1-247-864-11	CARBON 24K 5% 1/4W
R914	1-249-423-11	CARBON 3.3K 5% 1/4W
R915	1-249-431-11	CARBON 15K 5% 1/4W
R916	1-249-431-11	CARBON 15K 5% 1/4W
R917	1-249-414-11	CARBON 560 5% 1/4W
R918	1-249-425-11	CARBON 4.7K 5% 1/4W
RV101	1-228-995-00	RES, ADJ, CARBON 22K
RV102	1-228-995-00	RES, ADJ, CARBON 22K
RV103	1-228-995-00	RES, ADJ, CARBON 22K
RV104	1-228-993-00	RES, ADJ, CARBON 4.7K
RV201	1-228-990-00	RES, ADJ, METAL GLAZE 1K
RV701	1-237-874-31	RES, VAR, CARBON (MOTOR) 10K/10K (LINE OUT PHONE LEVEL)
S101	1-571-274-11	SWITCH, LEAF (LIMIT)
S601	1-554-205-00	SWITCH, PUSH (EJECT)
S602	1-554-205-00	SWITCH, PUSH (PST)
S603	1-554-205-00	SWITCH, PUSH (LOT)
S604	1-554-205-00	SWITCH, PUSH (HOME)
S605	1-570-886-11	SWITCH, MICRO (LOAD IN DET)
S801	1-554-303-21	SWITCH, KEY BOARD (DISC 1)
S802	1-554-303-21	SWITCH, KEY BOARD (DISC 2)
S803	1-554-303-21	SWITCH, KEY BOARD (DISC 3)
S804	1-554-303-21	SWITCH, KEY BOARD (DISC 4)
S805	1-554-303-21	SWITCH, KEY BOARD (DISC 5)
S806	1-554-303-21	SWITCH, KEY BOARD (DISC 6)
S807	1-554-303-21	SWITCH, KEY BOARD (DISC 7)
S808	1-554-303-21	SWITCH, KEY BOARD (DISC 8)
S809	1-554-303-21	SWITCH, KEY BOARD (DISC 9)
S810	1-554-303-21	SWITCH, KEY BOARD (DISC 10)
S811	1-554-303-21	SWITCH, KEY BOARD (TRACK 1)
S812	1-554-303-21	SWITCH, KEY BOARD (TRACK 2)
S813	1-554-303-21	SWITCH, KEY BOARD (TRACK 3)
S814	1-554-303-21	SWITCH, KEY BOARD (TRACK 4)
S815	1-554-303-21	SWITCH, KEY BOARD (TRACK 5)
S816	1-554-303-21	SWITCH, KEY BOARD (TRACK 6)
S817	1-554-303-21	SWITCH, KEY BOARD (TRACK 7)
S818	1-554-303-21	SWITCH, KEY BOARD (TRACK 8)
S819	1-554-303-21	SWITCH, KEY BOARD (TRACK 9)
S820	1-554-303-21	SWITCH, KEY BOARD (TRACK 10)
S821	1-554-303-21	SWITCH, KEY BOARD (EJECT)
S822	1-554-303-21	SWITCH, KEY BOARD (TIME)
S823	1-554-303-21	SWITCH, KEY BOARD (PLAY MODE PROGRAM)
S824	1-554-303-21	SWITCH, KEY BOARD (PLAY MODE SHUFFLE)
S825	1-554-303-21	SWITCH, KEY BOARD (PLAY MODE CONTINUE)
S826	1-554-303-21	SWITCH, KEY BOARD (PROGRAM BANK SELECT)
S827	1-554-303-21	SWITCH, KEY BOARD (FILE)
S828	1-554-303-21	SWITCH, KEY BOARD (ERASE)
S829	1-554-303-21	SWITCH, KEY BOARD (CHECK)
S830	1-554-303-21	SWITCH, KEY BOARD (CLEAR)
S831	1-554-303-21	SWITCH, KEY BOARD (
S832	1-554-303-21	SWITCH, KEY BOARD (
S833	1-554-303-21	SWITCH, KEY BOARD (+10)
S834	1-554-303-21	SWITCH, KEY BOARD (A.PAUSE/SPACE)
S835	1-554-303-21	SWITCH, KEY BOARD (REPEAT)
S836	1-554-303-21	SWITCH, KEY BOARD (
S837	1-554-303-21	SWITCH, KEY BOARD (
S838	1-554-303-21	SWITCH, KEY BOARD (
S839	1-554-303-21	SWITCH, KEY BOARD (AMS
S840	1-554-303-21	SWITCH, KEY BOARD (AMS
S851	1-571-305-11	SWITCH, PUSH (1 KEY)(POWER)
S852	1-554-481-00	SWITCH, SLIDE (TIMER)
S951	1-571-309-11	(E).....SWITCH (VOLTAGE SELECTOR)
X301	1-567-132-00	VIBLATOR, CERAMIC (8MHz)
X302	1-567-686-11	OSCILLATOR, CERAMIC (4MHz)
X401	1-567-926-11	VIBRATOR, CRYSTAL (16MHz)
X801	1-567-192-11	OSCILLATOR, CERAMIC (4MHz)

ACCESSORY & PACKING MATERIAL

1-465-022-11	REMOTE COMMANDER (RM-D105)
⚠1-526-564-00	(E).....AC PLCG ADAPTOR
1-558-543-11	CORD, CONNECTION
2-326-445-01	BAG, POLYETHYLENE
3-703-390-01	(US)....INSTRUCTION
3-786-228-11	(AEP,E).....MANUAL, INSTRUCTION
3-786-228-21	(US,Canadian).....MANUAL, INSTRUCTION
3-786-228-41	(AEP).....MANUAL, INSTRUCTION
3-786-228-31	(Canadian)...MANUAL, INSTRUCTION
*3-795-629-11	(AEP).....INSTRUCTION
*4-885-838-00	(AEP).....LABEL, CLASS 1
*4-926-313-11	INDIVIDUAL CARTON
*4-926-314-01	CUSHION (UPPER)
*4-926-315-01	CUSHION (LOWER)
7-685-103-19	SCREW +P 2X5 TYPE2 NON-SLIT
7-685-105-19	TAPPING +P 2X8 NON-SLIT
A-4675-162-B	MAGAZINE ASSY
X-2114-001-1	HOLDER ASSY, CD BOOKLET

9-953-360-12

Sony Corporation
Audio Group

English
88G1651-1
Printed in Japan
©1988.7
Published by A/V Engineering Service Dept.